SITE LOCATION MAP
SCALE: 1" = 500'

SEPTEMBER 2020
REVISED JULY 27 2022

O'SULLIVAN'S ISLAND FISHING & VIEWING PLATFORM

DERBY, CONNECTICUT

HRP PROJECT NO. NAU3003.CE

GENERAL NOTES

1. ALL DIMENSIONS, ELEVATIONS, AND EXISTING CONDITIONS SHALL BE FIELD VERIFIED BY THE CONTRACTOR PRIOR TO CONSTRUCTION. ANY DISCREPANCIES DISCOVERED DURING THE COURSE OF CONSTRUCTION SHALL BE PROMPTLY REPORTED TO THE ENGINEER.
2. THE CONTRACTOR IS RESPONSIBLE FOR DETERMINING, PRIOR TO BIDDING, THE LOCATIONS OF ALL UTILITIES AND SHALL BE RESPONSIBLE FOR ALL DAMAGE TO SAID UTILITIES. THE CONTRACTOR SHALL CONTACT "CALL BEFORE YOU DIG" (1-800-922-4455), AT LEAST 72 HOURS PRIOR TO STARTING CONSTRUCTION. THE CONTRACTOR SHALL COORDINATE ACTIVITIES WITH INDIVIDUAL UTILITY COMPANIES.
3. THE CONTRACTOR IS RESPONSIBLE FOR ENSURING THAT PROPER STORM DRAINAGE IS MAINTAINED THROUGHOUT CONSTRUCTION.
4. ALL SOIL EROSION AND SEDIMENT CONTROL MEASURES SHALL BE INSPECTED AND MAINTAINED ON A REGULAR BASIS AS OUTLINED HEREIN. INSPECTION AND MAINTENANCE SHALL BE CARRIED OUT THROUGHOUT THE CONSTRUCTION PERIOD UNTIL ALL DISTURBED AREAS ARE STABILIZED WITH VEGETATION OR PAVING. THE MINIMUM INSPECTION PERIOD SHALL BE WEEKLY AND AFTER MAJOR STORMS.
5. CONSTRUCTION ACTIVITIES SHALL CONFORM TO APPLICABLE SECTIONS OF THE TOWN OF DERBY STANDARDS AND APPLICABLE SECTIONS OF THE CONNECTICUT DEPARTMENT OF TRANSPORTATION "STANDARD SPECIFICATIONS FOR ROADS, BRIDGES, AND INCIDENTAL CONSTRUCTION," FORM 818, AS AMENDED.
6. NO IN-WATER WORK SHALL BE PERMITTED FROM APRIL 1 TO JUNE 30, INCLUSIVE.
7. FOLLOWING COMPLETION OF CONSTRUCTION, AN AS-BUILT SURVEY SHALL BE PERFORMED AND SUBMITTED TO OWNER AND ENGINEER.

SHEET INDEX

SHEET	TITLE / DESCRIPTION	CREATED	REVISED
	TITLE SHEET	09/16/2020	07/27/2022
GN1.0	GENERAL NOTES	10/19/2021	07/27/2022
A1.0	SITE ACCESS PLAN	09/16/2020	06/16/2022
C1.0	EXISTING CONDITIONS PLAN	09/16/2020	06/16/2022
C1.1	SITE LAYOUT PLAN	09/16/2020	07/27/2022
C1.2	NORTH ELEVATION VIEW	09/16/2020	07/27/2022
C1.3	GRADING PLAN	09/16/2020	07/27/2022
C1.4	SOIL EROSION AND SEDIMENT CONTROL PLAN	09/16/2020	07/27/2022
C1.5	SOIL EROSION AND SEDIMENT CONTROL NOTES AND DETAILS	09/16/2020	06/16/2022
C1.6	DETAILS	09/16/2020	03/07/2022
S1.0	DETAILS	05/14/2021	07/27/2022

Prepared By:

HRP
MOVE YOUR ENVIRONMENT FORWARD

197 SCOTT SWAMP ROAD
FARMINGTON, CT 06032
(860) 674-9570
HRPASSOCIATES.COM

Prepared For:

NAUGATUCK VALLEY COUNCIL OF GOVERNMENTS
49 LEAVENWORTH STREET 3RD FLOOR,
WATERBURY, CT 06702

GENERAL NOTES

1. HORIZONTAL AND VERTICAL CONTROLS AND EXISTING CONDITIONS ARE BASED ON INFORMATION OBTAINED FROM "TOPOGRAPHIC MAP, O'SULLIVAN'S ISLAND, DERBY, CT," PREPARED BY KRATERTZ, JONES & ASSOCIATES, INC., SCALE 1" = 20', DATED 05/19/2016, LAST REVISED 03/15/2019. THE BEARINGS ARE BASED UPON NORTH AMERICAN DATUM, 1983 (NAD 83). THE ELEVATIONS ARE BASED ON NORTH AMERICAN VERTICAL DATUM OF 1988 (NAVD 88).

2. ALL DIMENSIONS, ELEVATIONS, AND EXISTING CONDITIONS SHALL BE FIELD VERIFIED BY THE CONTRACTOR PRIOR TO CONSTRUCTION. ANY DISCREPANCIES DISCOVERED DURING THE COURSE OF CONSTRUCTION SHALL BE PROMPTLY REPORTED TO THE ENGINEER.

3. THE CONTRACTOR IS RESPONSIBLE FOR DETERMINING, PRIOR TO BIDDING, THE LOCATIONS OF ALL UTILITIES AND SHALL BE RESPONSIBLE FOR ALL DAMAGE TO SAID UTILITIES. THE CONTRACTOR SHALL CONTACT "CALL BEFORE YOU DIG" (1-800-922-4455), AT LEAST 72 HOURS PRIOR TO STARTING CONSTRUCTION. THE CONTRACTOR SHALL COORDINATE ACTIVITIES WITH INDIVIDUAL UTILITY COMPANIES.

4. THE CONTRACTOR IS RESPONSIBLE FOR ENSURING THAT PROPER STORM DRAINAGE IS MAINTAINED THROUGHOUT CONSTRUCTION.

5. ALL SOIL EROSION AND SEDIMENT CONTROL MEASURES SHALL BE INSPECTED AND MAINTAINED ON A REGULAR BASIS AS OUTLINED HEREIN. INSPECTION AND MAINTENANCE SHALL BE CARRIED OUT THROUGHOUT THE CONSTRUCTION PERIOD UNTIL ALL DISTURBED AREAS ARE STABILIZED WITH VEGETATION OR PAVING. THE MINIMUM INSPECTION PERIOD SHALL BE WEEKLY AND AFTER MAJOR STORMS.

6. CONSTRUCTION ACTIVITIES SHALL CONFORM TO APPLICABLE SECTIONS OF THE CITY OF DERBY STANDARDS INCLUDING THE INLAND WETLANDS AND PLANNING AND ZONING COMMISSIONS.

7. ALL CONSTRUCTION ACTIVITIES SHALL BE IN CONFORMANCE WITH THE CT DEEP LWRD (STRUCTURES, DREDGING, AND FILL) PERMIT AND THE CONDITIONS OF USACE CONSULTATION LETTER NAE-2021-00025 DATED DECEMBER 17, 2021 FOR THE PROJECT.

8. CONTRACTOR SHALL REFERENCE AND ALL ACTIVITIES SHALL BE IN CONFORMANCE WITH THE "GEOTECHNICAL ENGINEERING" REPORT PREPARED BY WELTI GEOTECHNICAL, P.C. DATED JULY 14, 2022, AND THE "SUBSURFACE INVESTIGATION REPORT" PREPARED BY HRP ASSOCIATES, INC. DATED MARCH 8, 2021 FOR THE PROJECT.

9. CONTRACTOR SHALL COORDINATE CONSTRUCTION ACTIVITIES WITH CT DOT ROUTE 34 DERBY-SHELTON BRIDGE PROJECT BEGINNING APRIL 2022 AND ONGOING.

10. CONTRACTOR SHALL REMOVE AND RESET FISHING LINE CONTAINERS AS NECESSARY TO PERFORM THE WORK.

DESIGN LOAD SUMMARY

1. THE INTENT OF THESE DOCUMENTS IS TO PROVIDE ADEQUATE CRITERIA FOR A "DESIGN-BUILD" OF PILES, CONNECTION AND PILE CRITERIA. THE CONTRACTOR SHALL PROVIDE DETAILED WORKING DRAWINGS BASED ON THESE DOCUMENTS AND LOAD SUMMARY BELOW.

LOAD TABLE	
DEAD LOAD	
DEAD	30 PSF
LIVE LOAD	
PEDESTRIAN	60 PSF
SNOW	30 PSF
ICE	12 KSF BREAKUP STR.
WATER	8.9 FT/S
WIND	125 MPH
CASES: PER PILE LOAD	
LIVE PEDESTRIAN	3840 LBS
SNOW	1920 LBS
DEAD	1280 LBS
BUOYANCY	750 LBS
WAVE UPLIFT/SLAM	PROVIDE 4T UPLIFT
LATERAL CURRENT	650 LBS
LATERAL WAVE SLAM	400 LBS
LATERAL DEBRIS RAFT	250 LBS
DOLPHIN LOAD	
ICE LATERAL	32 KIP
VESSEL COLLISION	204 KIP

HRP
MOVE YOUR ENVIRONMENT FORWARD
197 SCOTT SWAMP ROAD
FARMINGTON, CT 06032
(860) 674-9570
HRPASSOCIATES.COM

REVISIONS

NO.	DATE	DESCRIPTION
1	03/07/2022	RESPONSE TO CITY COMMENTS
2	06/16/2022	RESPONSE TO CITY COMMENTS
3	07/27/2022	UPDATED GEOTECHNICAL REPORT

DESIGNED: MS	SCALE: NTS
DRAWN: ASB	ISSUE DATE: 10/19/2021
REVIEWED: TRB	PROJECT NUMBER: NAU3003.CE
APPROVED: TRB	SHEET SIZE: 24"x36"

P.E. SEAL

O'SULLIVAN'S ISLAND FISHING & VIEWING PLATFORM

DERBY, CONNECTICUT

GENERAL NOTES

SHEET NO.

GN1.0

DRAWING NAME: J:\Nemco - naugatuck valley council of governments\o'sullivan island derby, ct\nau3003\cad\2022-03 set\GN1.0 GENERAL NOTES.dwg LAYOUT: GN1.0 GENERAL NOTES PLOT DATE: Jul 27, 2022 - 2:37pm OPERATOR: ASB

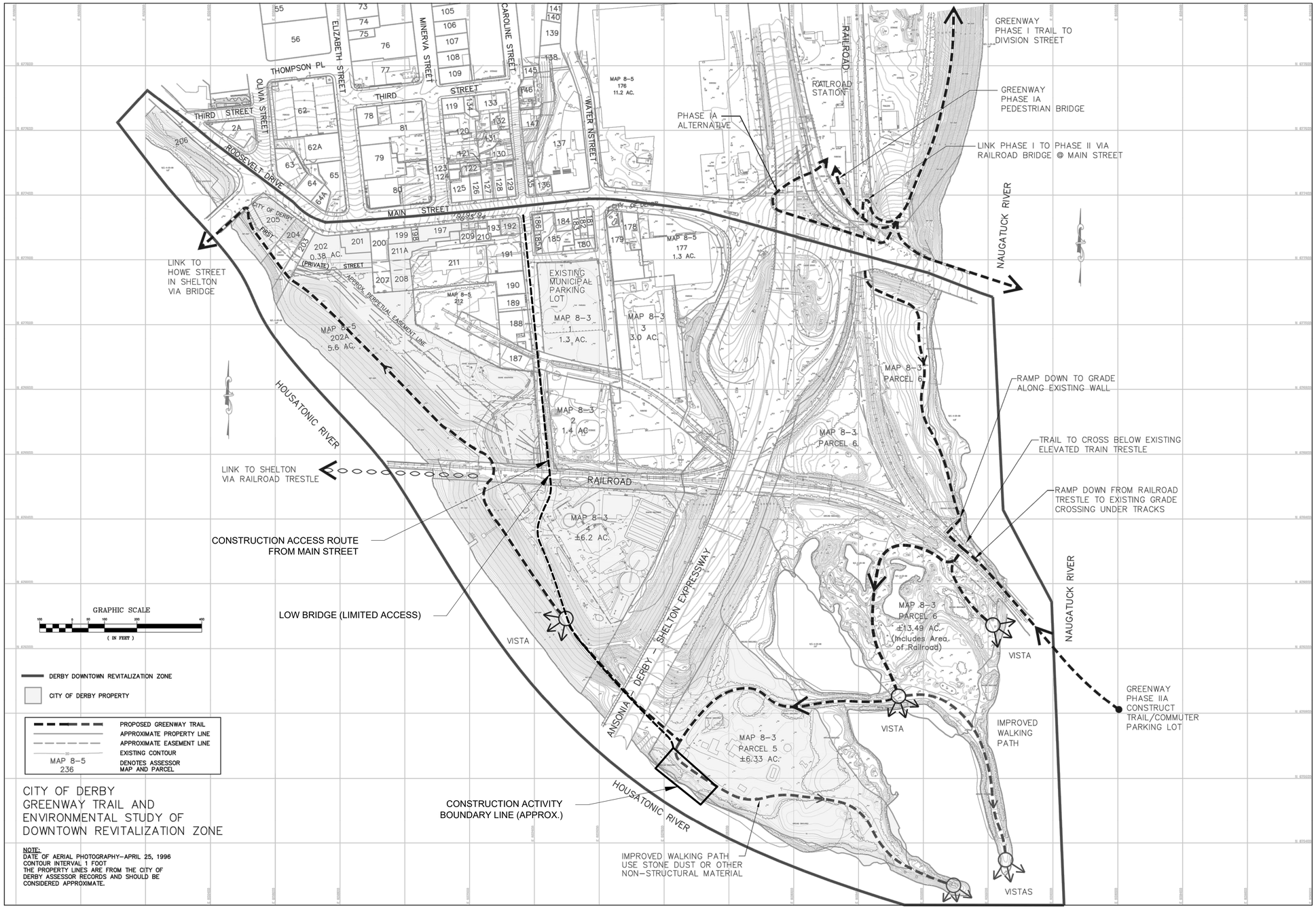

HRP
MOVE YOUR ENVIRONMENT FORWARD
197 SCOTT SWAMP ROAD
FARMINGTON, CT 06032
(860) 674-9570
HRPASSOCIATES.COM

NORTH

0 75' 150'

REVISIONS

NO.	DATE	DESCRIPTION
1	10/12/2021	
2	06/16/2022	RESPONSE TO CITY COMMENTS

DESIGNED: MS	SCALE: 1" = 150'
DRAWN: ASB	ISSUE DATE: 09/16/2020
REVIEWED: TRB	PROJECT NUMBER: NAU3003.CE
APPROVED: TRB	SHEET SIZE: 24"x36"

P.E. SEAL

O'SULLIVAN'S ISLAND FISHING & VIEWING PLATFORM

DERBY, CONNECTICUT

SITE ACCESS PLAN

SHEET NO.

A1.0

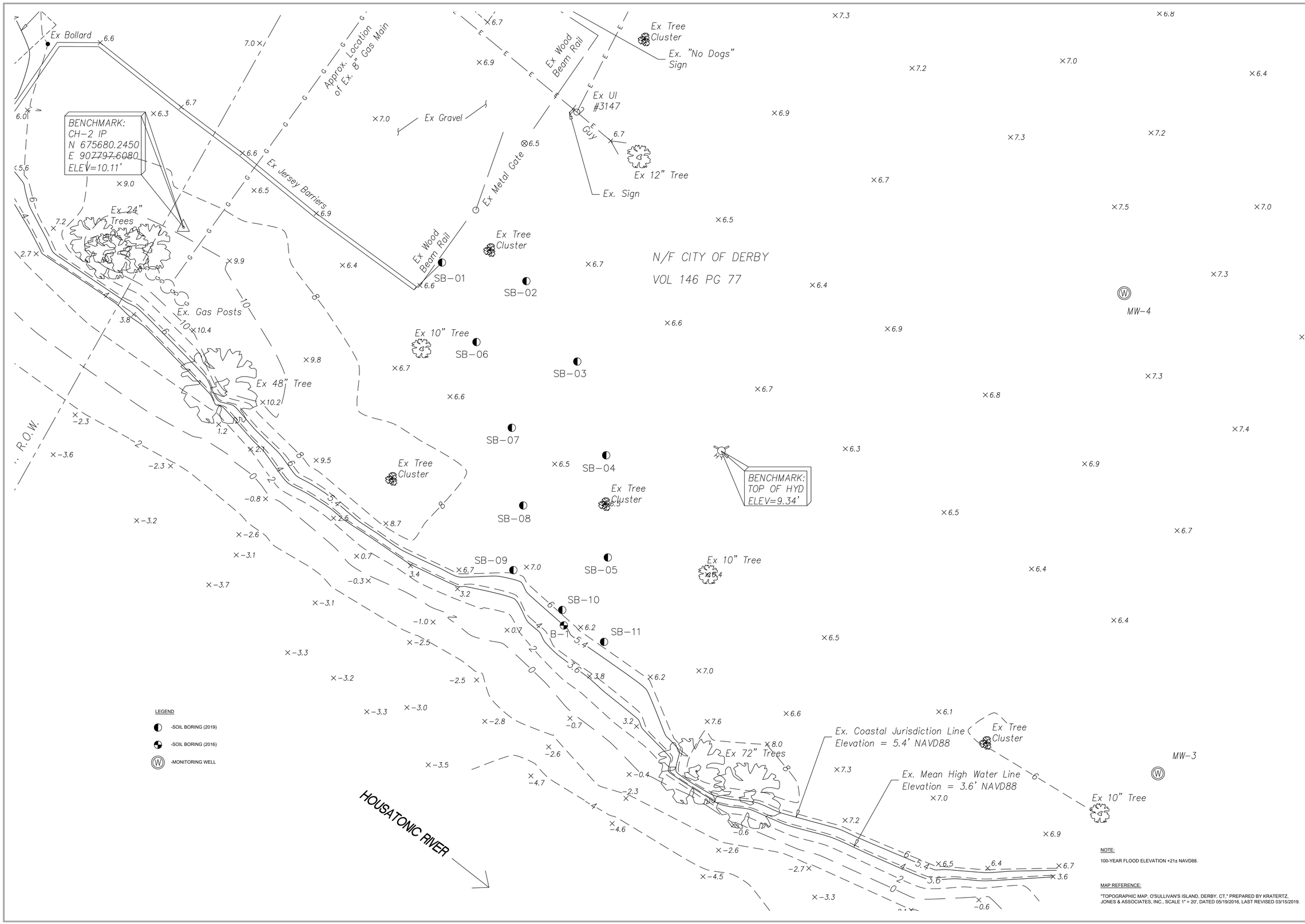

NOTE:

100-YEAR FLOOD ELEVATION +21± NAVD88.

MAP REFERENCE:

"TOPOGRAPHIC MAP, O'SULLIVAN'S ISLAND, DERBY, CT," PREPARED BY KRATERTZ, JONES & ASSOCIATES, INC., SCALE 1" = 20', DATED 05/19/2016, LAST REVISED 03/15/2019.

HRP
MOVE YOUR ENVIRONMENT FORWARD
197 SCOTT SWAMP ROAD
FARMINGTON, CT 06032
(860) 674-9570
HRPASSOCIATES.COM

NORTH

0 5' 10'

REVISIONS

NO.	DATE	DESCRIPTION
1	03/31/2021	
2	10/12/2021	RESPONSE TO CITY COMMENTS
3	03/07/2022	RESPONSE TO CITY COMMENTS
4	06/16/2022	

DESIGNED: MS	SCALE: 1" = 10'
DRAWN: ASB	ISSUE DATE: 09/16/2020
REVIEWED: TRB	PROJECT NUMBER: NAU3003.CE
APPROVED: TRB	SHEET SIZE: 24"x36"

P.E. SEAL

O'SULLIVAN'S ISLAND FISHING & VIEWING PLATFORM

DERBY, CONNECTICUT

EXISTING CONDITIONS PLAN

SHEET NO.

C1.0

DRAWING NAME: J:\N\nauco - naugatuck-valley council of governments\o'sullivan island derby, ct\nau3003c\CAD\C2022-03 set\C-1.0 EXISTING CONDITIONS PLAN.dwg LAYOUT: C1.0 EXISTING CONDITIONS PLOT DATE: Jul 27, 2022 - 2:20pm OPERATOR: ASB

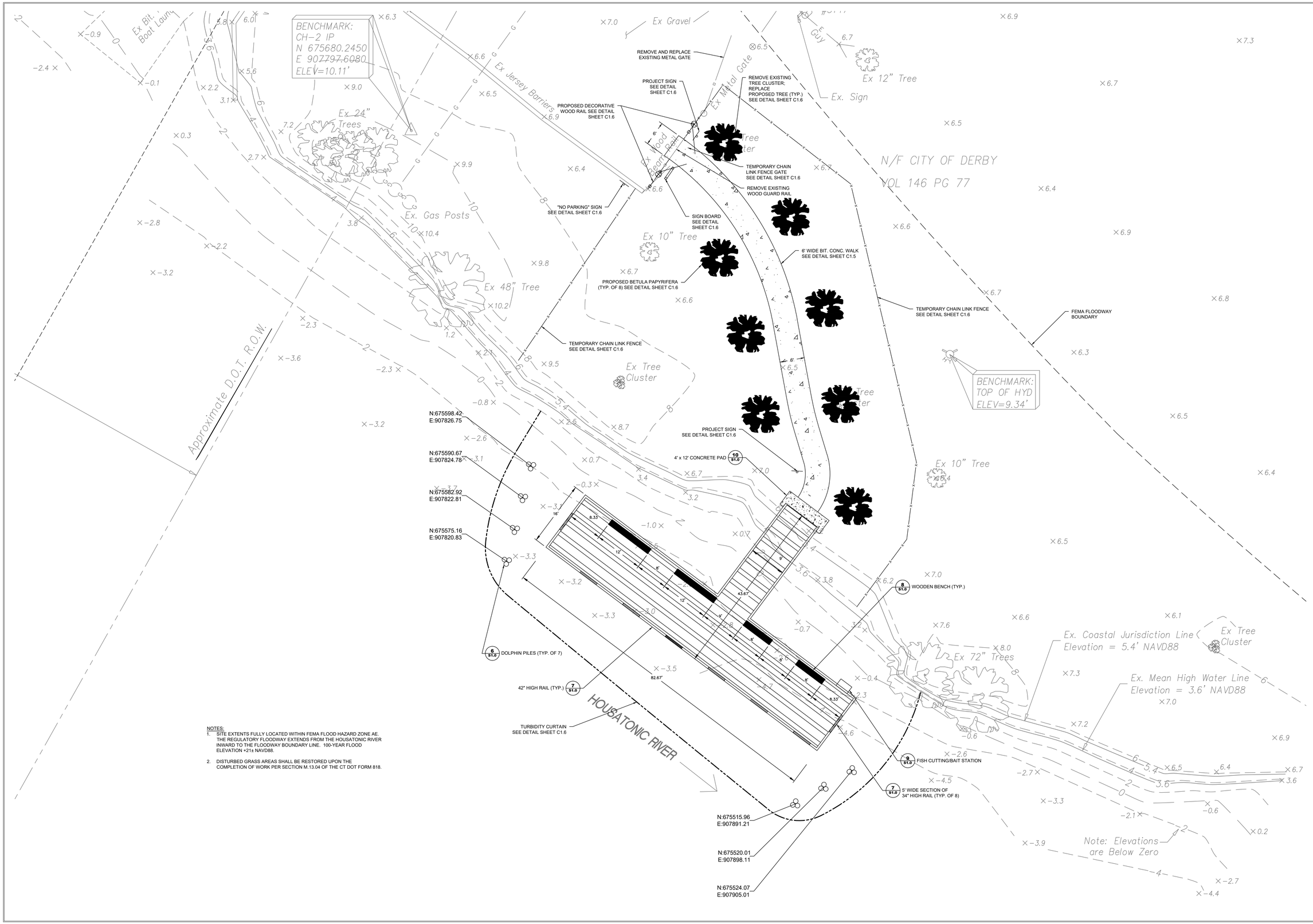

NOTES:

1. SITE EXTENTS FULLY LOCATED WITHIN FEMA FLOOD HAZARD ZONE AE. THE REGULATORY FLOODWAY EXTENDS FROM THE HOUSATONIC RIVER INWARD TO THE FLOODWAY BOUNDARY LINE. 100-YEAR FLOOD ELEVATION +21± NAVD88.
2. DISTURBED GRASS AREAS SHALL BE RESTORED UPON THE COMPLETION OF WORK PER SECTION M.13.04 OF THE CT DOT FORM 818.

HRP
MOVE YOUR ENVIRONMENT FORWARD
197 SCOTT SWAMP ROAD
FARMINGTON, CT 06032
(860) 674-9570
HRPASSOCIATES.COM

NORTH

0 5' 10'

REVISIONS

NO.	DATE	DESCRIPTION
1	05/21/2021	
2	10/12/2021	
3	03/07/2022	RESPONSE TO CITY COMMENTS
4	06/16/2022	RESPONSE TO CITY COMMENTS
5	07/27/2022	UPDATED GEOTECHNICAL REPORT

DESIGNED: MS	SCALE: 1" = 10'
DRAWN: ASB	ISSUE DATE: 09/16/2020
REVIEWED: TRB	PROJECT NUMBER: NAU3003.CE
APPROVED: TRB	SHEET SIZE: 24"x36"

P.E. SEAL

O'SULLIVAN'S ISLAND FISHING & VIEWING PLATFORM

DERBY, CONNECTICUT

SITE LAYOUT PLAN

SHEET NO.

C1.1

DRAWING NAME: J:\Nemaco - naugatuck valley council of governments\o'sullivan island dolphy, o'\aau3003\CAD\2022-03 nat\C1.1 SITE LAYOUT PLAN.dwg LAYOUT: C1.1 SITE LAYOUT PLAN PLOT DATE: Jul 27, 2022 - 2:04pm OPERATOR: ASB

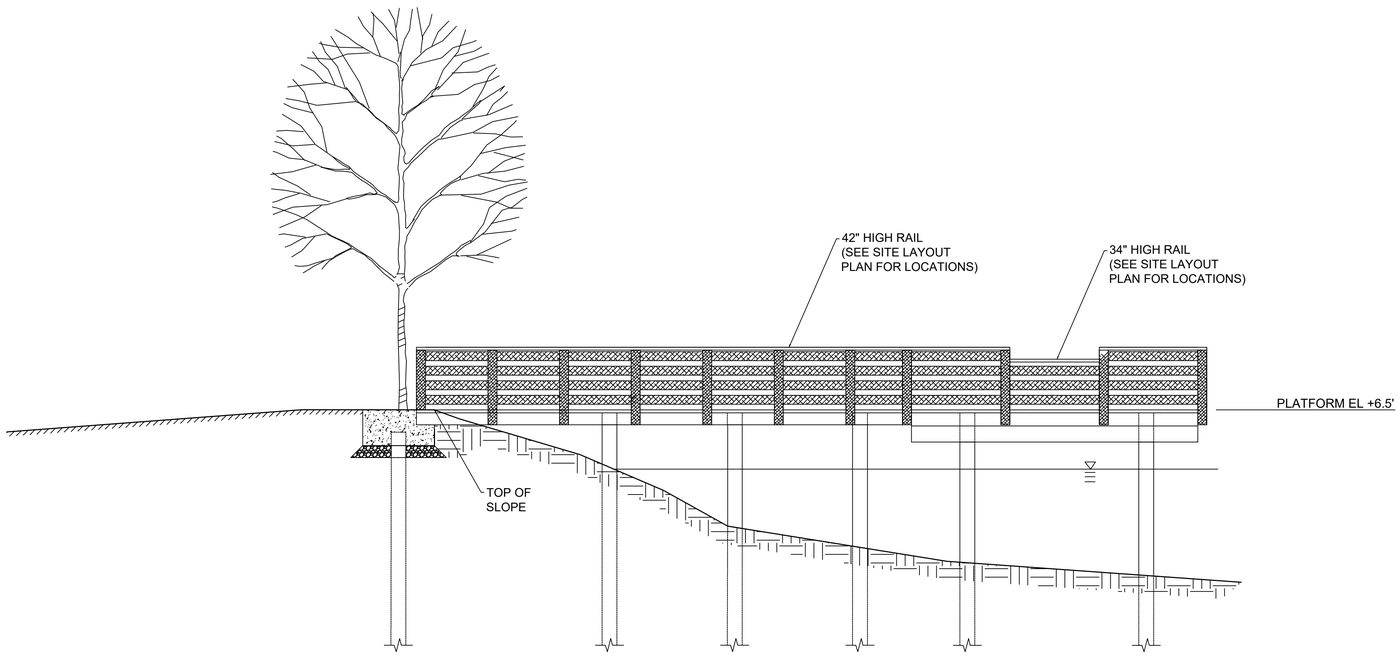

NORTH ELEVATION
SCALE: 1/4" = 1'-0"

NOTE:

1. SEE DETAIL SHEET S1.0 FOR DOCK PLATFORM DETAILS.
2. SEE "GEOTECHNICAL ENGINEERING" REPORT PREPARED BY WELTI GEOTECHNICAL, P.C. DATED JULY 14, 2022 FOR PILE DEPTHS.

HRP
MOVE YOUR ENVIRONMENT FORWARD
197 SCOTT SWAMP ROAD
FARMINGTON, CT 06032
(860) 674-9570
HRPASSOCIATES.COM

NORTH

0 2' 4'

REVISIONS

NO.	DATE	DESCRIPTION
1	10/18/2021	
2	03/07/2022	RESPONSE TO CITY COMMENTS
3	06/16/2022	RESPONSE TO CITY COMMENTS
4	07/27/2022	UPDATED GEOTECHNICAL REPORT

DESIGNED: MS	SCALE: AS NOTED		
DRAWN: ASB	ISSUE DATE: 09/16/2020	PROJECT NUMBER: NAU3003.CE	
REVIEWED: TRB		SHEET SIZE: 24"x36"	
APPROVED: TRB			

P.E. SEAL

O'SULLIVAN'S ISLAND FISHING & VIEWING PLATFORM

DERBY, CONNECTICUT

NORTH ELEVATION VIEW

SHEET NO.

C1.2

DRAWING NAME: J:\N\naucc - naugatuck valley council of governments\o'sullivan island derby, ct\acad\dwgs\CAD\2022-03 set\C1.2 NORTH ELEVATION VIEW.dwg LAYOUT: C1.2 NORTH ELEVATION VIEW PLOT DATE: Jul 27, 2022 - 2:30pm OPERATOR: ASB

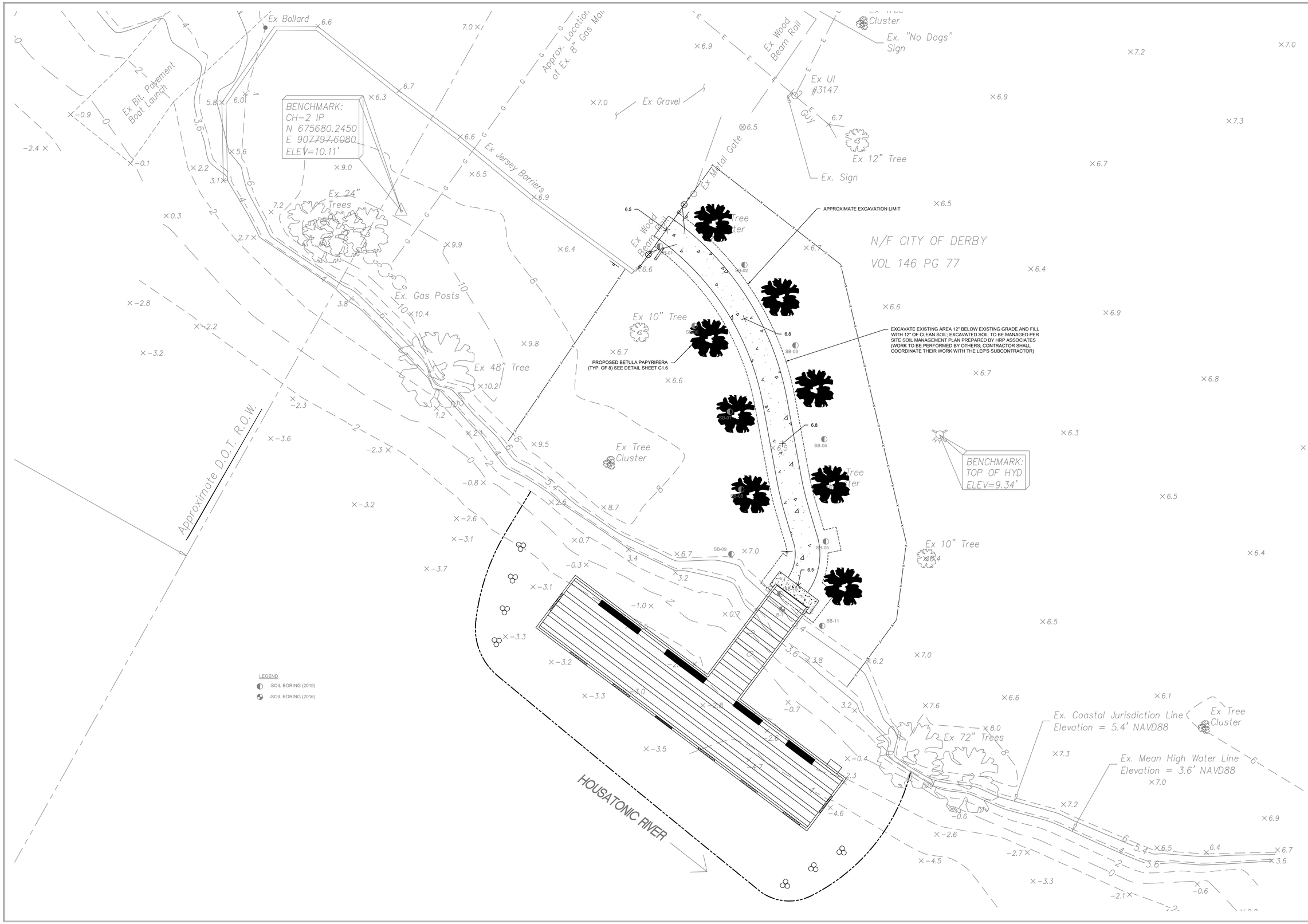

HRP
MOVE YOUR ENVIRONMENT FORWARD
197 SCOTT SWAMP ROAD
FARMINGTON, CT 06032
(860) 674-9570
HRPASSOCIATES.COM

NORTH

0 5' 10'

REVISIONS

NO.	DATE	DESCRIPTION
1	03/31/2021	
2	10/18/2021	
3	03/07/2022	RESPONSE TO CITY COMMENTS
4	07/27/2022	UPDATED GEOTECHNICAL REPORT

DESIGNED: MS	SCALE: 1" = 10'
DRAWN: ASB	ISSUE DATE: 09/16/2020
REVIEWED: TRB	PROJECT NUMBER: NAU3003.CE
APPROVED: TRB	SHEET SIZE: 24"x36"

P.E. SEAL

O'SULLIVAN'S ISLAND FISHING & VIEWING PLATFORM

DERBY, CONNECTICUT

GRADING PLAN

SHEET NO.

C1.3

DRAWING NAME: J:\N\Nauco - naugatuck valley council of governments\o'sullivan island derby, ct\nau3003ce\CAD\2020-03-nau\C1.3-GRADING PLAN.dwg LAYOUT: C1.3-GRADING PLAN PLOT DATE: Jul 27, 2022 - 2:30pm OPERATOR: ASB

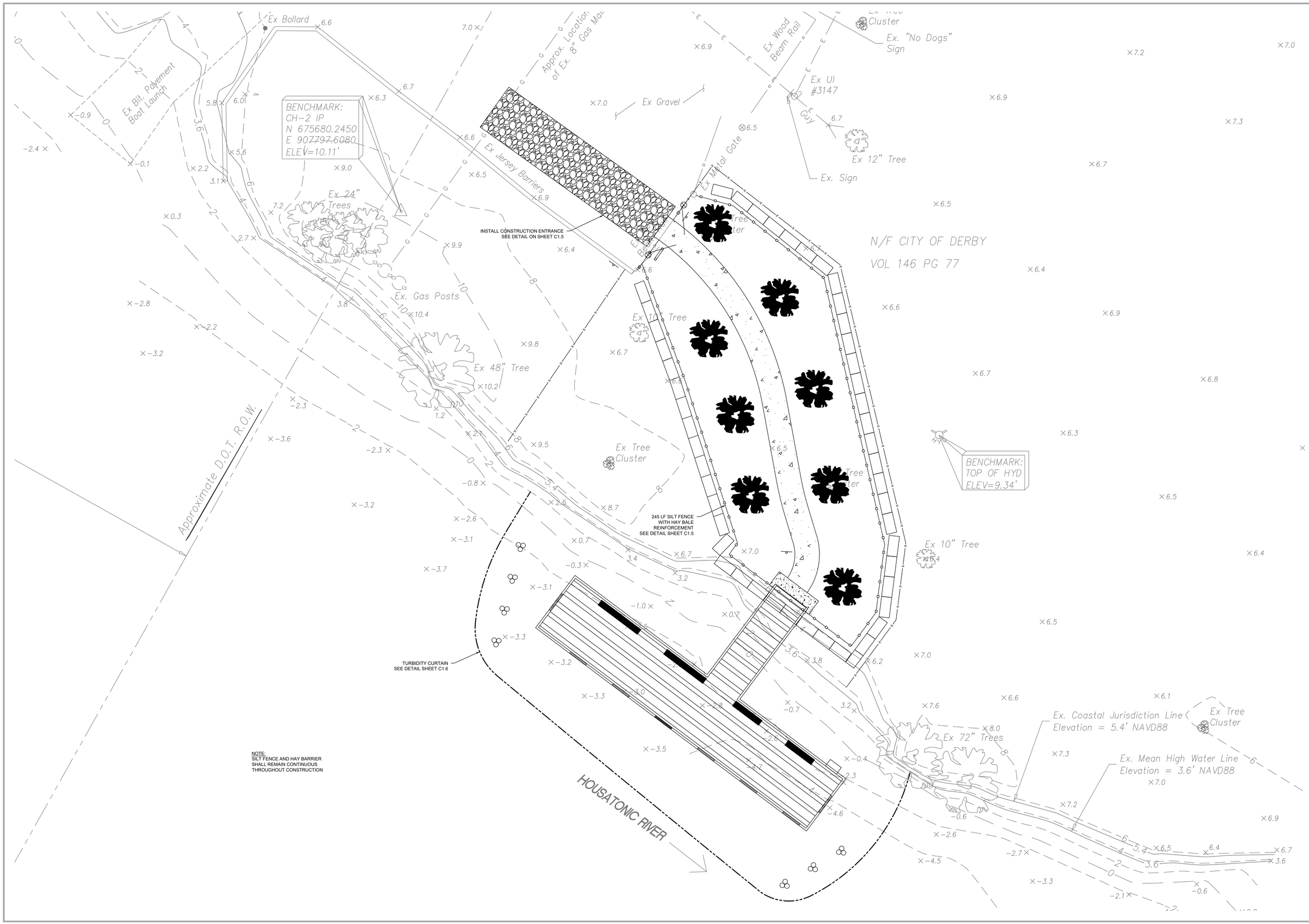

NOTE:
SILT FENCE AND HAY BARRIER
SHALL REMAIN CONTINUOUS
THROUGHOUT CONSTRUCTION

HRP
MOVE YOUR ENVIRONMENT FORWARD
197 SCOTT SWAMP ROAD
FARMINGTON, CT 06032
(860) 674-9570
HRPASSOCIATES.COM

NORTH

0 5' 10'

REVISIONS

NO.	DATE	DESCRIPTION
1	03/31/2021	
2	10/18/2021	
3	03/07/2022	RESPONSE TO CITY COMMENTS
4	07/27/2022	UPDATED GEOTECHNICAL REPORT

DESIGNED: MS	SCALE: 1" = 10'
DRAWN: ASB	ISSUE DATE: 09/16/2020
REVIEWED: TRB	PROJECT NUMBER: NAU3003.CE
APPROVED: TRB	SHEET SIZE: 24"x36"

P.E. SEAL

O'SULLIVAN'S ISLAND FISHING & VIEWING PLATFORM

DERBY, CONNECTICUT

SOIL EROSION AND SEDIMENT CONTROL PLAN

SHEET NO.

C1.4

DRAWING NAME: J:\Nemaco - mapgrock valley council of governments\o'sullivan island dolphy, ct\nau3003\cad\2020-03-\nau3003-C1.4-SOIL EROSION AND SEDIMENT CONTROL PLAN.dwg LAYOUT: C1.4 SOIL EROSION AND SEDIMENT CONTROL PLAN PLOT DATE: Jul 27, 2022 - 2:30pm OPERATOR: ASB

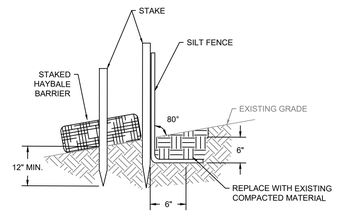

SILT FENCE BACKED BY STAKED HAYBALES
NOT TO SCALE

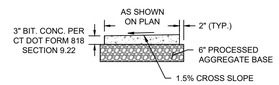

BITUMINOUS CONCRETE WALK
NOT TO SCALE

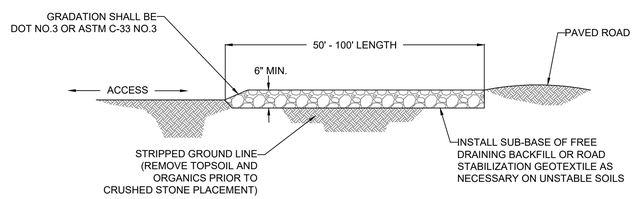

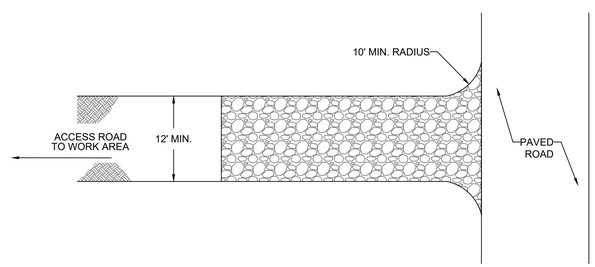

CONSTRUCTION ENTRANCE
NOT TO SCALE

GENERAL

THE PLAN PROPOSES EROSION CONTROL MEASURES TO ADEQUATELY CONTROL ACCELERATED EROSION AND SEDIMENTATION AND REDUCE THE DANGER FROM STORM WATER RUNOFF AT THE SITE. THE RUNOFF SHALL BE CONTROLLED BY THE INTERCEPTION, DIVERSION, AND SAFE DISPOSAL OF PRECIPITATION. RUNOFF SHALL ALSO BE CONTROLLED BY STAGING CONSTRUCTION ACTIVITY AND PRESERVING NATURAL VEGETATION WHENEVER POSSIBLE.

EXISTING VEGETATION SHALL BE PROTECTED AND ONLY THAT CLEARING AND GRUBBING ABSOLUTELY NECESSARY FOR THE PROPOSED CONSTRUCTION SHALL BE PERFORMED. ALL DISTURBED AREAS SHALL BE RESTORED TO THEIR ORIGINAL CONDITION AND CONTOUR, UNLESS OTHERWISE INDICATED ON THE PLANS. DISTURBED GRASS AREAS SHALL BE RESTORED UPON THE COMPLETION OF WORK PER SECTION M.13.04 OF THE CT DOT FORM 818. THE CONTRACTOR SHALL TAKE A SPECIAL CARE WITH HIS CONSTRUCTION METHODS AND SHALL COMPLY WITH THE FOLLOWING GUIDELINES.

REFERENCE IS MADE TO THE 2002 "CONNECTICUT GUIDELINES FOR SOIL EROSION AND SEDIMENT CONTROL", AS AMENDED. THE GUIDELINES ARE OBTAINABLE FROM THE CONNECTICUT COUNCIL ON SOIL AND WATER CONSERVATION, STATE OFFICE BUILDING, HARTFORD, CONNECTICUT, AND SHOULD BE USED AS A REFERENCE IN CONSTRUCTING THE EROSION AND SEDIMENT CONTROLS INDICATED ON THESE PLANS.

SEDIMENTATION CONTROL

ALL AREAS SHALL BE PROTECTED FROM SEDIMENTATION DURING AND AFTER CONSTRUCTION, PARTICULARLY THE STORAGE OF EXCAVATED OR STOCKPILED MATERIAL. THE CONTRACTOR SHALL CAREFULLY STRIP ALL TOPSOIL,
LOAM, OR ORGANIC MATTER PRIOR TO TRENCHING OR OTHER OPERATION, AND SHALL STORE THEM SEPARATELY
FROM ALL OTHER MATERIALS DURING EXCAVATION. EACH STOCKPILE MUST BE ADEQUATELY RINGED WITH
SEDIMENT CONTROL MATERIAL (I.E. HAY BALES AND/OR GEOTEXTILE).

EROSION CONTROL PLAN

SEDIMENTATION CONTROL SYSTEM - THE SEDIMENTATION CONTROL SYSTEM SHALL CONSIST OF SILT FENCE WITH HAY BALE REINFORCEMENT.

SILT FENCE WITH HAYBALE BACKING - THE SEDIMENTATION CONTROL SYSTEM SHALL BE INSTALLED IMMEDIATELY AFTER A CUT SLOPE HAS BEEN GRADED, BEFORE A FILL SLOPE HAS BEEN CREATED AND AS INDICATED ON THE PLANS. THE SYSTEM IS DESIGNED TO INTERCEPT SILT AND SEDIMENT BEFORE IT REACHES THE WETLAND AREAS, OR WATERCOURSES. DEPOSITS OF SEDIMENT AND SILT ARE TO BE PERIODICALLY REMOVED FOR THE UPSTREAM SIDE OF THE FENCE AND HAYBALES. THIS MATERIAL IS TO BE SPREAD AND STABILIZED IN AREAS NOT SUBJECT TO EROSION, OR IN AREAS WHICH ARE NOT TO BE PAVED OR BUILT ON. THE SEDIMENTATION CONTROL SYSTEM AREAS IS TO BE REPLACED AS NECESSARY TO PROVIDE PROPER FILTERING ACTION. THE SYSTEM IS TO REMAIN IN PLACE AND BE MAINTAINED TO INSURE EFFICIENT SILTATION CONTROL UNTIL ALL AREAS ABOVE THE FENCE ARE STABILIZED AND VEGETATION HAS BEEN ESTABLISHED.

IN ALL AREAS, REMOVAL OF TREES, BUSHES AND OTHER VEGETATION, AND DISTURBANCE OF THE SOIL, IS TO BE KEPT TO AN ABSOLUTE MINIMUM WHILE ALLOWING PROPER DEVELOPMENT OF THE SITE.

DURING CONSTRUCTION, AS SMALL AN AREA OF SOIL AS POSSIBLE SHOULD BE EXPOSED FOR AS SHORT A TIME AS POSSIBLE. AFTER CONSTRUCTION, GRADE, RESPREAD TOPSOIL, AND STABILIZE SOIL BY SEEDING AND MULCHING SO AS TO PREVENT EROSION.

SEDIMENTATION AND EROSION CONTROL MAINTENANCE PROCEDURES

ALL SEDIMENTATION AND EROSION CONTROL DEVICES SHALL BE INSPECTED DURING CONSTRUCTION ON A WEEKLY BASIS, AND FOLLOWING ALL STORMS, BY THE ENGINEER. THE CONTRACTOR SHALL MAINTAIN AND MAKE REPAIRS AND REMOVE SEDIMENT AS REQUESTED BY THE ENGINEER. THIS WORK SHALL BE PERFORMED WITH 24 HOURS OF THE REQUEST AND THERE SHALL BE NO SEPARATE PAYMENT FOR THIS WORK.

THE CONTRACTOR SHALL SWEEP ADJACENT ROADWAYS AS REQUIRED OR REQUESTED BY THE ENGINEER. FOLLOWING COMPLETION OF CONSTRUCTION, THE CONTRACTOR SHALL REPAIR ALL ERODED AREAS AND ENSURE A GOOD STAND OF TURF IS ESTABLISHED THROUGHOUT. THE CONTRACTOR SHALL REPAIR ALL ERODED OR DISPLACED RIPRAP, AND CLEAN SEDIMENT COVERED STONES.

HRP
MOVE YOUR ENVIRONMENT FORWARD
197 SCOTT SWAMP ROAD
FARMINGTON, CT 06032
(860) 674-9570
HRPASSOCIATES.COM

REVISIONS

NO.	DATE	DESCRIPTION
1	12/04/2020	
2	10/18/2021	RESPONSE TO CITY COMMENTS
3	03/07/2022	RESPONSE TO CITY COMMENTS
4	06/16/2022	

DESIGNED: MS	SCALE: NTS		
DRAWN: ASB	ISSUE DATE: 09/16/2020	PROJECT NUMBER: NAU3003.CE	
REVIEWED: TRB			
APPROVED: TRB		SHEET SIZE: 24"x36"	

P.E. SEAL

O'SULLIVAN'S ISLAND FISHING & VIEWING PLATFORM

DERBY, CONNECTICUT

SOIL EROSION AND SEDIMENT CONTROL NOTES AND DETAILS

SHEET NO.

C1.5

DRAWING NAME: J:\Nemco - naugatuck valley council of governments\o'sullivan island delphy, ct\nau3003\cad\2022-03-\nau\C1.5 SOIL EROSION AND SEDIMENT CONTROL NOTES & DETAILS.dwg LAYOUT: C1.5 SOIL EROSION AND SEDIMENT CONTROL NOTES & DETAILS PLOT DATE: Jul 27, 2022 - 2:30pm OPERATOR: ASB

FLOATING TURBIDITY CURTAIN

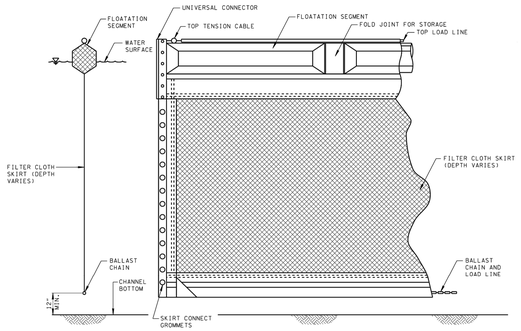

TYPICAL ANCHORING SECTION

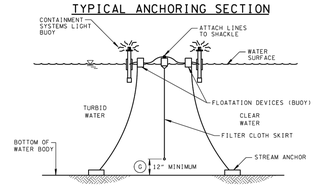

SECTION A-A

AUTOMATIC FLASHING LIGHT BUOY (ON AT DUSK-OFF AT DAWN) 100' ON CENTER SHALL BE USED IN NAVIGABLE CHANNELS ONLY

EROSION CONTROL PLAN LEGEND: FLOATING TURBIDITY CURTAIN

TYPICAL ANCHORING PLAN FOR SHORELINE/RIVER EDGE WORK

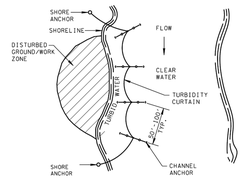

PLAN VIEW

FLOATING TURBIDITY CURTAIN GENERAL NOTES

(A) FLOATING TURBIDITY CURTAINS (ALSO KNOWN AS TURBIDITY BARRIERS OR SILT CURTAINS) CREATE A BARRIER TO PREVENT TURBID WATER FROM ENTERING CLEAR WATER. FLOATING TURBIDITY CURTAINS SHOULD BE USED TO ISOLATE ACTIVE CONSTRUCTION AREAS WITHIN OR ADJACENT TO A BODY OF WATER TO MINIMIZE THE MIGRATION OF SILT LADEN WATER OUT OF THE CONSTRUCTION ZONE.

(B) TURBIDITY CURTAINS SHALL NOT BE INSTALLED PERPENDICULAR ACROSS THE MAIN FLOW OF A SIGNIFICANT BODY OF MOVING WATER.

(C) FLOATING TURBIDITY CURTAINS SHALL NOT BE USED WHERE THE ANTICIPATED FLOW VELOCITIES WILL EXCEED 5 FT/SEC.

(D) TURBIDITY CURTAINS SHALL BE ANCHORED TO PREVENT DRIFT SHOREWARD OR DOWNSTREAM. ANCHORAGE SHALL BE INSTALLED ON BOTH SHORE AND STREAM SIDE. CURTAINS SHALL BE INSTALLED AS CLOSE TO PROJECT SITE AS POSSIBLE. BARRIERS SHOULD BE A BRIGHT COLOR (YELLOW OR "INTERNATIONAL" ORANGE ARE RECOMMENDED) THAT WILL ATTRACT THE ATTENTION OF NEARBY BOATERS.

(E) SHORE ANCHORS SHALL CONSIST OF A POST WITH DEADMAN OR APPROVED EQUAL. STREAM ANCHORS SHALL BE OF SUFFICIENT SIZE TO STABILIZE THE BARRIER WITH NUMBER AND SPACING DEPENDENT ON WATERWAY VELOCITIES AND MANUFACTURER'S RECOMMENDATIONS.

(F) IN SHALLOW WATER (2 FEET OF DEPTH OR LESS) A TURBIDITY CURTAIN MAY BE INSTALLED ON STAKES DRIVEN INTO THE BED OF THE WATER BODY.

(G) FABRIC SECTIONS SHALL BE CONNECTED END TO END WITH A MINIMUM 5/8 INCH DIAMETER POLYPROPYLENE ROPE. FABRIC SHALL BE SEAMED TOGETHER IN A MANNER THAT RETAINS THE OVERALL TENSILE STRENGTH.

(H) DESIGN OF CURTAIN AND ANCHORAGE SHALL BE IN ACCORDANCE WITH MANUFACTURER'S RECOMMENDATIONS. FILTER CLOTH SKIRT SHOULD BE ABLE TO WITHSTAND THE FORCES IMPARTED ON IT DUE TO THE EXPECTED WIND VELOCITY OR STREAM VELOCITY. FABRIC SHALL BE MADE OF A NON-DETERIORATING MATERIAL, SUCH AS PLASTIC OR NYLON, WHICH WILL ALLOW WATER TO PASS THROUGH WHILE STILL RETAINING SEDIMENT.

(I) THE TURBIDITY CURTAIN AND ADJACENT WORK AREAS SHALL NOT BE DISTURBED 12 HOURS PRIOR TO REMOVAL FROM WATER BODY. MAINTENANCE SHALL BE PERFORMED AS NEEDED. CONTRACTOR SHALL REMOVE THE CURTAIN AT COMPLETION OF WORK IN A MANNER THAT WILL PREVENT SILTATION OF THE WATERWAY. DURING REMOVAL, EXTREME CARE SHOULD BE TAKEN NOT TO DISTURB ANY SEDIMENT DEPOSITS.

(J) MAINTAIN 12" MINIMUM GAP BETWEEN SKIRT BOTTOM AND CHANNEL BOTTOM TO PREVENT ACCUMULATED SEDIMENT FROM PULLING TOP OF CURTAIN BELOW WATER SURFACE.

(K) IN WIND OR WAVE ACTION SITUATIONS, THE MAXIMUM DEPTH OF THE CURTAIN SHALL BE 12 FEET.

(L) CONCENTRATED FLOWS SHALL NOT DISCHARGE BEYOND FLOATING TURBIDITY CURTAIN. CURTAINS ARE NOT TO BE INSTALLED ACROSS FLOWING BODY OF WATER.

(M) WHEN INSTALLED IN A NAVIGABLE WATERWAY, BUOYS SHOULD BE LIT ACCORDING TO REGULATORY AGENCY STANDARDS.

(N) WHEN ESTIMATING THE LENGTH OF TURBIDITY CURTAIN, ALLOW 10 TO 20 PERCENT VARIANCE IN STRAIGHT LINE MEASUREMENT.

(O) **TURBIDITY CURTAIN SHALL NOT BE MEASURED FOR PAYMENT AND INCLUDED IN THE GENERAL COST TO PERFORM THE WORK. THE WORK SHALL INCLUDE ALL MATERIAL AND LABOR NECESSARY FOR CONSTRUCTION, MAINTENANCE, AND REMOVAL OF TURBIDITY CURTAINS.**

PHYSICAL PROPERTIES OF TURBIDITY CURTAIN FABRIC

PHYSICAL PROPERTY	MINIMUM REQUIREMENT
THICKNESS, MILS	45
WEIGHT, OZ. / SQ. YD.	18
GRAB TENSILE STRENGTH, LBS.	300
UV INHIBITOR	MUST BE INCLUDED
APPARENT OPENING SIZE (AOS)	FINER THAN OR EQUAL TO #70 U.S. STANDARD SIEVE

TURBIDITY CURTAIN
NOT TO SCALE

NOTE:
1. VERTICAL AND HORIZONTAL MEMBERS MAXIMUM 8' O.C.
2. ALL COMPONENTS SHALL HAVE BLACK VINYL COATING.

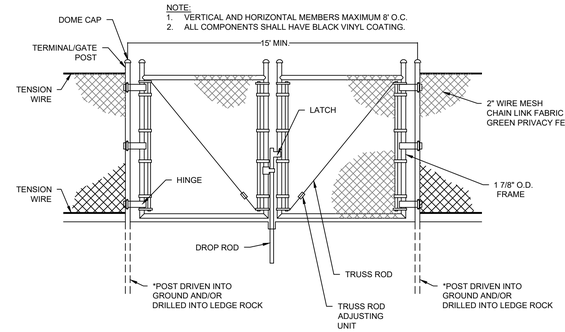

NOTE:
FURNISH AND INSTALL A CORNER POST AND BRACE RAIL WHERE THE CHANGE IN FENCE ALIGNMENT IS GREATER THAN 15'.

*ALL POSTS TO BE DRIVEN UNLESS AUTHORIZED BY THE ENGINEER

6-FOOT TEMPORARY SWING GATE
NOT TO SCALE

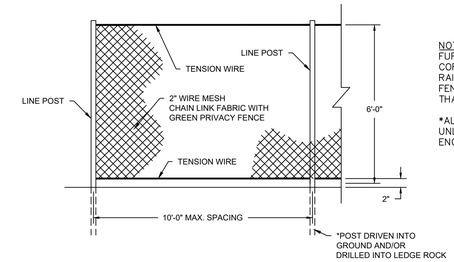

NOTE:
FURNISH AND INSTALL A CORNER POST AND BRACE RAIL WHERE THE CHANGE IN FENCE ALIGNMENT IS GREATER THAN 15'.

*ALL POSTS TO BE DRIVEN UNLESS AUTHORIZED BY THE ENGINEER

TEMPORARY CONSTRUCTION CHAIN LINK FENCE
NOT TO SCALE

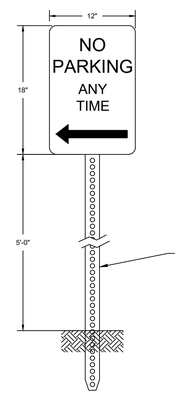

CT DOT NO. 31-0630 "NO PARKING" SIGN
NOT TO SCALE

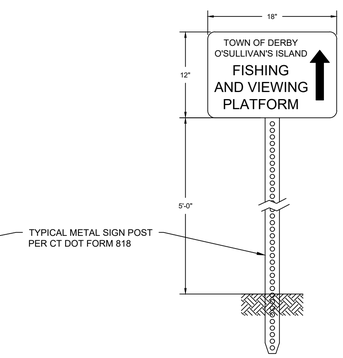

PROJECT SIGN
NOT TO SCALE

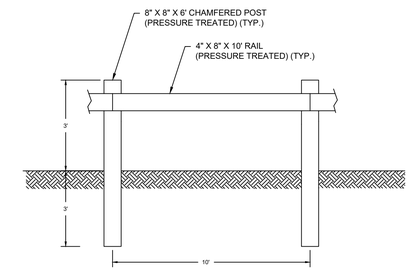

DECORATIVE WOOD RAIL
NOT TO SCALE

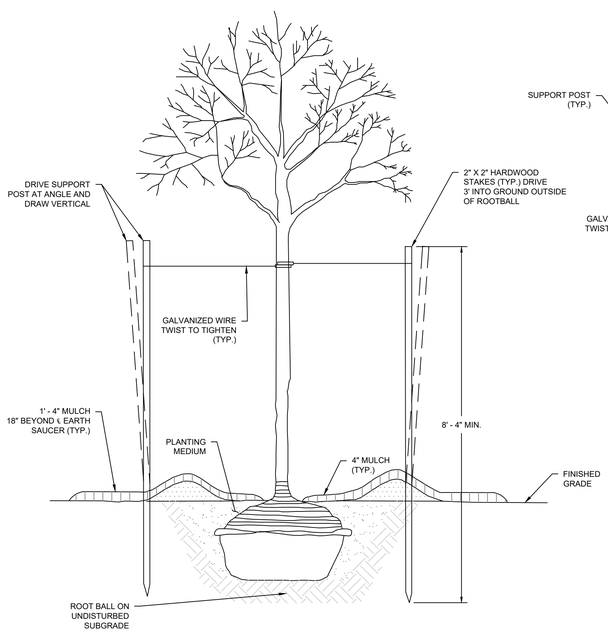

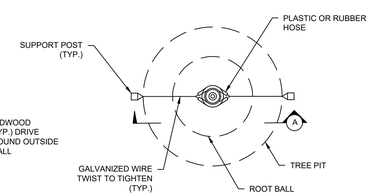

NOTES:

1. USE 3 POSTS FOR STAKING TREES 8' HIGH OR GREATER. USE 2 POSTS FOR STAKING TREES LESS THAN 8' HIGH.
2. TREES SHALL BE GREATER THAN OR EQUAL TO 2" CALIPER.
3. THE PLANTING PIT SIZE SHALL BE TWICE THE DIAMETER OF THE ROOT BALL IN WIDTH AND LESS THAN 2" LESS THAN THE HEIGHT OF THE ROOT BALL.
4. ALL EXTERIOR PACKAGING MATERIAL APPLIED TO THE PLANTS SHALL BE REMOVED AFTER THE PLANT IS LOCATED IN THE PLANTING PIT. CUT AND REMOVE TWINE, BURLAP, OR WIRE BASKETS FROM THE TOP 2/3 OF THE ROOT BALL.
5. USE DOUBLE STRAND NO.10 WIRE FOR TREES GREATER THAN OR EQUAL TO 8" CALIPER.
6. TREE TRUNK WRAPPING MATERIAL SHALL BE USED AS DIRECTED BY THE ENGINEER.

TREE PLANTING DETAIL
NOT TO SCALE

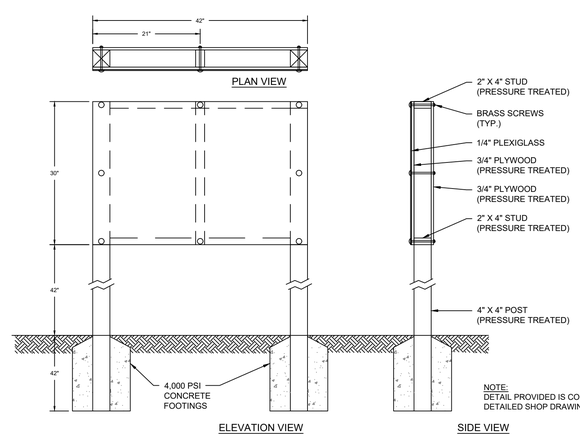

NOTE:
DETAIL PROVIDED IS CONCEPTUAL; CONTRACTOR TO PROVIDE DETAILED SHOP DRAWING FOR REVIEW AND APPROVAL.

SIGN BOARD
NOT TO SCALE

HRP
MOVE YOUR ENVIRONMENT FORWARD
197 SCOTT SWAMP ROAD
FARMINGTON, CT 06032
(860) 674-9570
HRPASSOCIATES.COM

REVISIONS

NO.	DATE	DESCRIPTION
1	10/18/2021	RESPONSE TO CITY COMMENTS
2	03/07/2022	

DESIGNED: MS	SCALE: AS NOTED
DRAWN: ASB	ISSUE DATE: 05/14/2021
REVIEWED: TRB	PROJECT NUMBER: NAU3003.CE
APPROVED: TRB	SHEET SIZE: 24"x36"

P.E. SEAL

O'SULLIVAN'S ISLAND FISHING & VIEWING PLATFORM
DERBY, CONNECTICUT

DETAILS

SHEET NO.
C1.6

DRAWING NAME: J:\N\naucc - naugatuck valley council of governments\o'sullivan island derby - o'sien\000\cc\CAD\2022-03-ucl\C1.6_AND\S1.0 DETAILS.dwg LAYOUT: C1.6 DETAILS PLOT DATE: Jul 27, 2022 - 2:26pm OPERATOR: ASB

PROJECT NOTES AND SPECIFICATIONS:

1. ALL HARDWARE TO BE HOT DIPPED GALVANIZED.
2. PRESSURE TREAT PILE CAP BEAMS AND STRINGERS TO 0.60 PCF CCA.
3. PRESSURE TREAT DECKING TO 0.15 PCF COPPER AZAL.
4. BOLTS 3/4"ø HOT DIPPED GALVANIZED.
5. ANGLE 8X4X7/8" HOT DIPPED GALVANIZED.
6. CONCRETE 4000 PSI 5–7% AIR, 4" SLUMP, BROOM FINISH.
7. EPOXY COATED A615 REBAR.
8. ALL REINFORCING STEEL TO HAVE 2" MIN. CONCRETE COVER.
9. PROVIDE FIXED DOLPHINS AS SHOWN.
10. PROVIDE RAILING SYSTEM CAPABLE OF RESISTING 200 POUND POINT LOAD IN ANY DIRECTION AND 50 PSF UNIFORM LOAD.
11. PILES SHALL BE DRIVEN TO A DEPTH OF APPROXIMATELY 30' BELOW, AS SPECIFIED IN SECTION 5.01 OF THE "GEOTECHNICAL ENGINEERING" REPORT PREPARED BY WELTI GEOTECHNICAL, P.C.
12. THE FINAL BLOW COUNT CRITERIA OF THE PILES SHALL BE ESTABLISHED WITH A WEAP ANALYSIS TO BE PREPARED BY THE DESIGN–BUILD CONTRACTOR BASED ON THE SOIL PROPERTIES AND THE PARAMETERS OF THE SELECTED HAMMER, AS SPECIFIED IN SECTION 5.1 OF THE "GEOTECHNICAL ENGINEERING" REPORT PREPARED BY WELTI GEOTECHNICAL, P.C.

*NOTES:

THE UPSTREAM BATTER PILES SHOULD BE ORIENTED TO RESIST UPSTREAM GENERATED FORCES. THE DOWNSTREAM BATTER CAN BE ORIENTED FOR VESSEL IMPACT FROM DOWNSTREAM DIRECTION. THE BATTER AT THE CENTER PILES SHOULD BE ORIENTED ORTHOGONAL TO THE SHORE LINE.

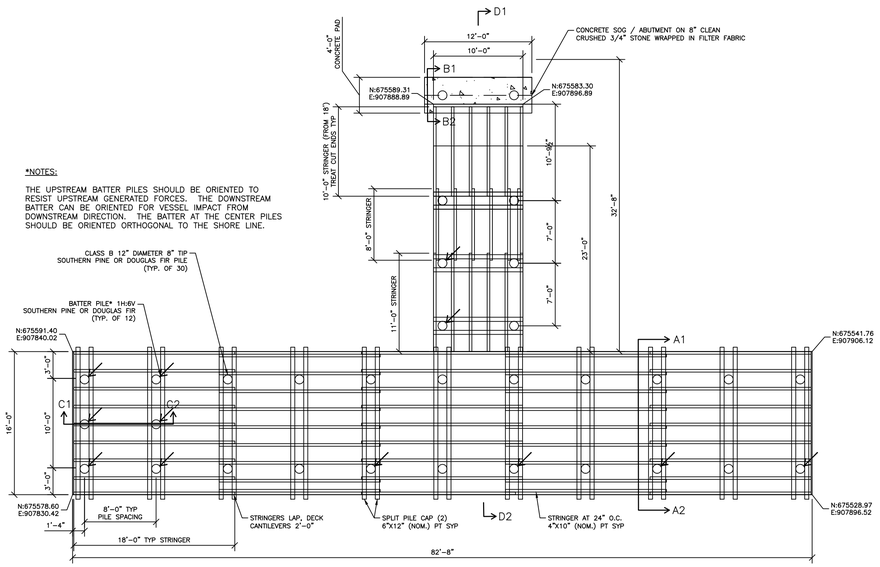

1 / S1.0 PIER LAYOUT - PLAN VIEW
SCALE: 1/8" = 1'-0"

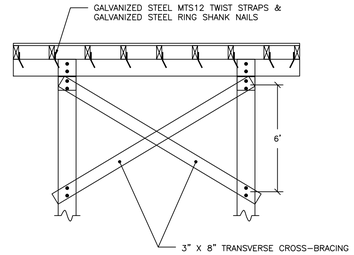

NOTE: LONGITUDINAL BRACING SIMILAR IN DETAIL TO TRANSVERSE BRACING

2 / S1.0 BRACING & STRINGER TO PILE CAP CONNECTION A1-A2
SCALE: 1/4" = 1'-0"

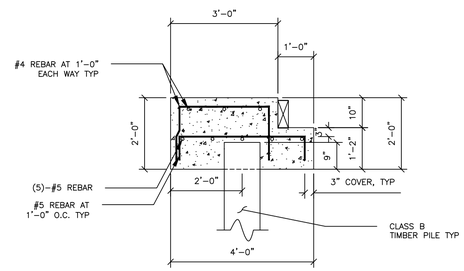

3 / S1.0 SECTION VIEW SECTION B1-B2
SCALE: 1/2" = 1'-0"

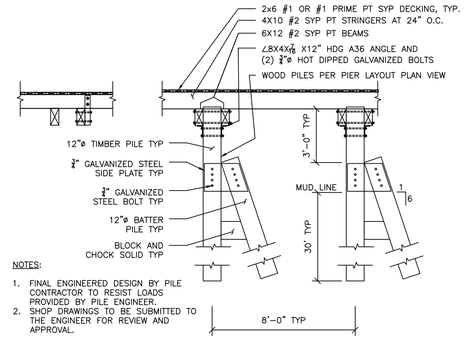

NOTES:

1. FINAL ENGINEERED DESIGN BY PILE CONTRACTOR TO RESIST LOADS PROVIDED BY PILE ENGINEER.
2. SHOP DRAWINGS TO BE SUBMITTED TO THE ENGINEER FOR REVIEW AND APPROVAL.

4 / S1.0 SECTION VIEW SECTION C1-C2
SCALE: 1/4" = 1'-0"

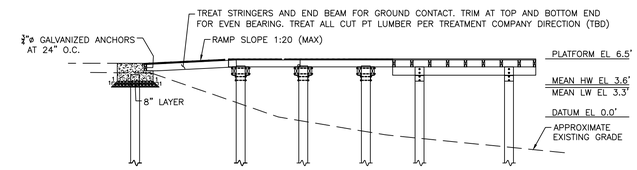

5 / S1.0 ELEVATION VIEW SECTION D1-D2
SCALE: 1/8" = 1'-0"

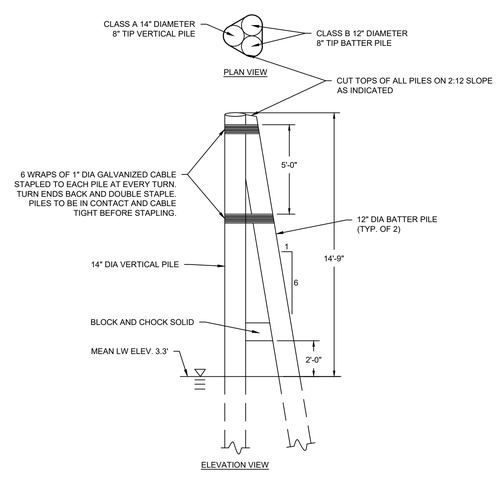

6 / S1.0 3 PILE DOLPHIN
SCALE: 1/4" = 1'-0"

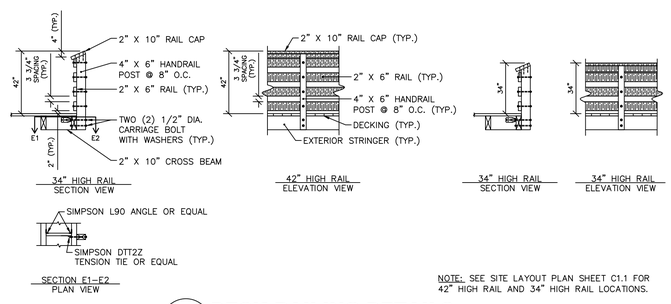

NOTE: SEE SITE LAYOUT PLAN SHEET C1.1 FOR 42" HIGH RAIL AND 34" HIGH RAIL LOCATIONS.

7 / S1.0 DECK RAILING DETAILS
SCALE: 1/4" = 1'-0"

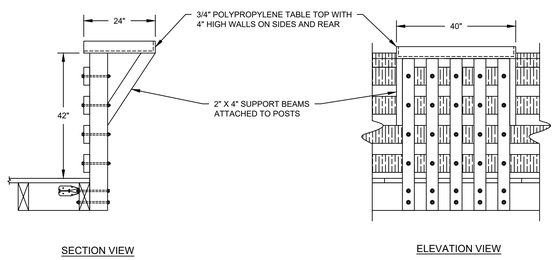

9 / S1.0 FISH CUTTING/BAIT STATION
NOT TO SCALE

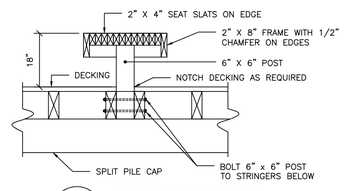

NOTE: SEE SITE LAYOUT PLAN SHEET C1.1 FOR BENCH LOCATIONS.

8 / S1.0 BENCH DETAIL
SCALE: 1/2" = 1'-0"

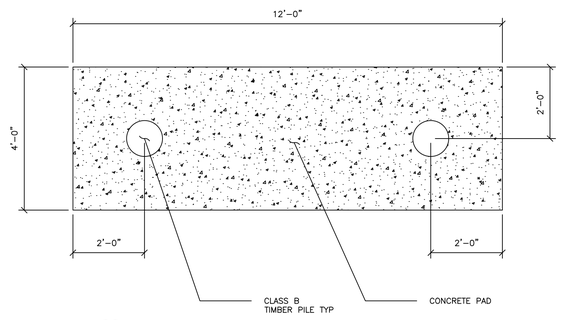

10 / S1.0 CONCRETE PAD - PLAN VIEW
SCALE: 1/2" = 1'-0"

NOTE:

1. SEE "GEOTECHNICAL ENGINEERING" REPORT PREPARED BY WELTI GEOTECHNICAL, P.C. FOR PILE DETAILS.

HRP
MOVE YOUR ENVIRONMENT FORWARD
197 SCOTT SWAMP ROAD
FARMINGTON, CT 06032
(860) 674-9570
HRPASSOCIATES.COM

REVISIONS

NO.	DATE	DESCRIPTION
1	10/18/2021	RESPONSE TO CITY COMMENTS
2	04/05/2022	RESPONSE TO CITY COMMENTS
3	06/16/2022	RESPONSE TO CITY COMMENTS
4	07/27/2022	UPDATED GEOTECHNICAL REPORT

DESIGNED:	MS
DRAWN:	ASB
REVIEWED:	TRB
APPROVED:	TRB
SCALE:	AS NOTED
ISSUE DATE:	09/16/2020
PROJECT NUMBER:	NAU3003.CE
SHEET SIZE:	24"x36"

P.E. SEAL

O'SULLIVAN'S ISLAND FISHING & VIEWING PLATFORM

DERBY, CONNECTICUT

DETAILS

SHEET NO.

S1.0

DRAWING NAME: J:\N\naus-- naugatuck-valley council of governments\osullivan island derby, ct\autoCAD\AUG2022-03 set\C1.0 AND S1.0 DETAILS.dwg LAYOUT: S1.0 DETAILS PLOT DATE: Jul 27, 2022 - 2:30pm OPERATOR: ASB