PROJECT MANUAL

O'SULLIVAN ISLAND FISHING & VIEWING PLATFORM

October 27, 2022

City of Derby

Copyright, 2006 City of Derby

HRP PROJECT NO. NAU3003.CE

Designer:
HRP
197 Scott Swamp Road
Farmington, CT 06032

INDEX TO CONTRACT DOCUMENTS

	Page Numbers
REQUEST FOR BIDS	RE-l
INFORMATION FOR BIDDERS	IF-l through IF-7
PROPOSAL FORMS/BID FORMS Proposal/Bid Form Bid Schedule References Bid Bond	PF-l through PF-7
CONTRACT FORMS Contract and Agreement Performance Bond Payment Bond Contractor's Wage Certification Form Town Attorney Certification Form AU-66 Non-Collusion Affidavit of Prime Bidders Non-Collusion Affidavit of Sub Contractor Federal Contract Clauses	CF-1 through CF-43
GENERAL REQUIREMENTS	G-1 through G-10
SUPPLEMENTAL CONDITIONS	SC-1 through SC-8
SPECIAL PROVISIONS iincluding NTC,,geotechnical reports and permits	
DERAL WAGE RATES	
ADDENDA	

City of Derby

LEGAL NOTICE

REQUEST FOR BIDS

Sealed bids for the construction of the following project will be received by the Purchasing Office, City of Derby at the Derby City Hall located at 1 Elizabeth Street, Derby, CT 06418 until **November 17, 2022 at 12:00 p.m.** local time after which no additional bids will be accepted. No exceptions. Immediately following, the bids will be publicly opened and read.

O'Sullivan's Island Fishing & Viewing Platform HRP PROJECT NO. NAU3003.CE

The project consists of the installation of an ADA Compliant fishing pier and viewing platform located on O'Sullivan Island on the Housatonic River. The pier is located southeast from the Commodore Hull Bridge along the shore of the river. Construction shall be in accordance with the current industry construction standards, Form 818, all supplements thereto and special provisions provided herein. All proposals must be on the form furnished with the Contract Documents.

This contract is subject to federal contract compliance requirements.

The minimum rates to be paid labor of the various classifications shall be in accordance with the Davis-Bacon Act. For contracts equal to or less than $2,500, contractors are required to pay the federal minimum wage as provided in Section 6(a)(1) of the Fair Labor Standards Act.

For prime contracts in excess of $100,000, contractors and subcontractors must also, under the provisions of the Contract Work Hours and Safety Standards Act, as amended, pay laborers and mechanics, including guards and watchmen, at least one and one-half times their regular rate of pay for all hours worked over 40 in a workweek. A Connecticut Department of Labor Contractors Wage Certification Form is to be submitted to the the City of Derby before the award of the contract.

Project Manuals and Plans can be obtained at no cost from the Naugatuck Valley Council of Governments, NVCOG, website http://www.nvcogct.gov under the Current Projects section. All firms obtaining Plans and Project Manuals must submit contact information by e-mail to KSvetz@nvcogct.gov Contact information must be submitted seven days in advance of the bid opening to be considered.

A Non-Mandatory Pre-Bid Meeting will be held on Wednesday, November 9, 2022 and will commence at the project location, at 10:00 a.m. local time.

Bids must be accompanied by a certified check or Bid Bond in writing on forms provided by the City of Derby in the amount of at least one tenth (10%) of the amount of the Bid and payable to the order of the City of Derby. The successful Bidder will be required to furnish and pay for a Performance Bond and a Payment Bond in the amount of one hundred percent (100%) of the Contract price.

The right is reserved by the City of Derby to reject any or all Bids, to waive any informalities or defects in Bids, and to make such time extensions as may be necessary in order to review and compare Bids, to obtain such supplemental information as may be necessary to review Bids and to accept Bid(s) that, in the judgment of the City of Derby, will be in the City's best interest.

Date:October 27, 2022 **City of Derby, Connecticut**

INFORMATION FOR BIDDERS

City of Derby

O'Sullivan Island Fishing &
Viewing Platform
HRP Project No. NAU3003.CE

1. Proposals Received

Sealed proposals for the O'Sullivan Island Fishing & Viewing Platform will be received by the Mayor's Office, City of Derby, 1 Elizabeth Street, Derby, CT 06418 until **November 17, 2022, 12:00 p.m.** local time. Immediately following, the bids will be publicly opened and read.

2. Location and Description of Work

The project consists of the installation of an ADA compliant fishing pier and viewing platform located on O'Sullivan Island on the Housatonic River. The pier is located southeast from the Commodore Hull Bridge along the shore of the river.

3. Schedule of Construction and Time of Completion

The attention of the Bidder is called to the provisions of the General Requirements, Section 6 of the General Conditions, and requiring submittal of a schedule of operations.

The attention of the Bidder is called to the requirements of Time for Completion, Section 3 of the Supplemental Conditions for initiation and completion of the work.

The Bidder's attention is especially directed to Liquidated Damages, Section 4 of the Supplement Conditions for information about failure to complete the project on time.

4. Plans and Project Manuals

The Project Manual can be obtained at no cost from the Naugatuck Valley Council of Governments, NVCOG, web site http://www.nvcogct.gov under the ***Current Projects*** *section. All firms obtaining plans and Project Manuals must submit contact information by e-mail to KSvetz@nvcogct.gov Contact information must be submitted seven days in advance of the bid opening to be considered.*

The construction contract for the O'Sullivan Island Fishing & Viewing Platform HRP Project No. NAU3003.CE, will be entered into by the successful bidder and the City of Derby. The State of Connecticut Department of Transportation Standard Specifications for Roads, Bridges and Incidental Construction, Form 818, along with the contract drawings, supplemental specifications and special provisions contained herein will detail the general requirements for materials, methods of installation, measurement and basis of payment to be required in this project. Any references to the State of Connecticut, the Department, the commissioner, Engineer, or other terms indicating the State of Connecticut and her agents as party to the contract shall for this project mean the City of Derby and her designated agents or employees.

Where insurance is required to be carried in the name of the State of Connecticut and the State of Connecticut is to be held harmless, this shall be done in the name of the City of Derby and the City of Derby shall be held harmless.

All requirements for material testing, certificates of the compliance or material certifications shall be done as if this were a contract being entered into with the State of Connecticut, shall be in accordance with Form 818.

It is the intent of this contract to maintain all standard requirements of Form 818 without attempting to redefine every term within the 818 to the "City of Derby".

The bidder shall, therefore, be aware that the City of Derby and its agents shall inspect and administrate this contract, make contract interpretations, determine the acceptability of the work and approve requests for payments. The Contractor shall be responsible for the requirements stated in Form 818, supplemental specifications, special provisions and in the construction drawings.

5. Addenda and Interpretations

No interpretations of the meaning of the contract documents will be made to any Bidder orally.

Every request for such interpretation shall be in writing, addressed to Karen Svetz, P.E. Naugatuck Valley Council of Governments, 49 Leavenworth Street, Waterbury, CT 06702 or emailed to ksvetz@nvcogct.gov. To be given consideration, such requests must be received at least seven (7) days prior to the date fixed for the opening of bids. Any and all such interpretations and any supplemental instructions will be in the form of written addenda to the contract documents, which, if issued, will be posted to the *NVCOG's* website under Current Projects for all prospective Bidders, no later than four (4) days prior to the date fixed for the opening of bids. Failure of any Bidder to receive any such addendum or interpretations shall not relieve such Bidder from any obligation under his bid as submitted. All addenda so issued shall become part of the Contract Documents.

6. Familiarity of the Work

Each Bidder shall fully inform himself prior to bidding as to existing conditions and limitations under which the work is to be performed, and shall include in his bid a sum to cover the cost of items necessary to perform the work as set forth in the Contract Documents. No allowance will be made to a Bidder because of lack of such examination or knowledge. The submission of a bid will be considered as conclusive evidence that the Bidder has made such examination.

Where borings or other exploration data are shown on the Plans or made available to the Bidder, it is understood that such data were obtained in the usual manner, and with reasonable care, and are to be interpreted and used as the Bidder sees fit. There is no expressed or implied agreement that the depths or the character of the material and water levels have been correctly indicated, and the Bidder is cautioned to take into account that condition affecting the work may differ from those indicated.

The Owner assumes no responsibility whatsoever with respect to ascertaining for the Contractor such facts concerning physical characteristics at the site of the project.

The Contractor agrees that he shall make no claim for and has no right to additional payment or extension of time for completion of the work, or any other concessions, because of any interpretations or misunderstanding on his part of this Contract, or because of any failure on his part to fully acquaint himself with all conditions relating to

the work. Permission for making borings, test pits, or other investigations of subsurface conditions will be arranged for by the Owner upon receipt of a written request thereof.

7. Existing Conditions

In bidding on this Contract, each Bidder acknowledges that he has made whatever investigation of the project site he has deemed necessary for the purpose of bidding

8. Estimate of Work

For bidding purposes, the work has been subdivided into unit price items. The quantities shown below are to be considered as approximate only. The Inspector does not expressly or by implication agree that the actual quantity(ies) will correspond therewith, but reserves the right to increase or decrease the amount of any Item or portion of the work as may be deemed necessary.

9. Qualification of Bidders

A Bidder shall be a contractor who is experienced in the construction of the projects of this type. The Proposal shall contain adequate proof of the qualifications of the Bidder to perform, in a satisfactory manner and within the time specified, all the work covered by the Plans and Project Manual. This proof shall be fully recorded on the pages titled "References", which shall become part of the Proposal.

10. Disqualification of Bidders

More than one proposal from an individual, firm, partnership, corporation, or an association under the same, or different, names will not be considered. Reasonable grounds for believing that any Bidder is interested in more than one proposal for the work contemplated will cause the rejection of all proposals in which such Bidder is interested. Any or all proposals in which such Bidder is interested will be rejected if there is reason for believing that collusion exists among the Bidders; and all participants in such collusion will not be considered in future proposals for the same work. Proposals in which the prices are obviously unbalanced may be rejected. No Contract will be awarded except to competent Bidders capable of performing the class or work contemplated.

11. Preparation of Proposals

The Proposal must be made upon the forms contained herein. The blank spaces in the Proposals must be filled in correctly where indicated. The Bidder must state, both in words and in numerals, written or printed in ink, the prices for which he proposes to do each Item of the work contemplated. In case of discrepancy between the words and the numerals, the words shall govern. Ditto marks are not considered writing, or printing, and shall not be used. The Bidder shall sign his Proposal correctly. If an individual makes the Proposal, his name and post office address must be shown. If made by a firm, partnership, or corporation, the Proposal must be signed by an official of the firm, partnership, or corporation authorized to sign contracts, and must show the post office address of the firm, partnership, or corporation.

Each bid must be submitted in a sealed envelope bearing on the outside the name of the Bidder, this address, and name of the project for which the bid is submitted. If forwarded by mail, the sealed envelope containing the bid must be enclosed in another envelope addressed to: Mayor's Office, City of Derby, City Hall, 1 Elizabeth Street, Derby, CT 06418.

12. Irregular Proposals

The City of Derby reserves the right to reject any proposals if they show any omission, alteration of form, additions not called for, conditional bids, or irregularities of any kind.

13. Proposal Guarantee

No proposal will be considered unless accompanied by a certified check in U.S. dollars, or bid bond using an insurance company licensed to do business in the State of Connecticut in an amount equal to at least one-tenth (10%) of the amount of the bid and payable to the order of the City of Derby, said check or bid bond to be returned to the Bidder unless forfeited as hereinafter stipulated. Such checks or bid bonds will be returned to all bidders within five (5) days after the execution of the Contract and the furnishing of the required security by the successful Bidder.

14. Withdrawal of Proposals

If a Bidder wishes to withdraw his Proposal, he may do so before the time fixed for the opening of bids by communicating his purpose to the office of the Mayor. Upon such notice, the Proposal will be handed to him unopened.

15. Execution of Contract

The party to whom the Contract is awarded, or his authorized representative, will be required to attend at the office of the Mayor, City of Derby, with the sureties offered by him, or them, and a current certificate of Corporate good standing issued by the Office of the Secretary of State in which the corporation is incorporated, and execute the Contract within ten (10) days from the date of the award. If the party entering into this contract is a corporation, a Corporate Resolution duly executed by the president and Secretary of the Corporation authorizing the Corporation to enter into this Contract shall be provided. In case of his failure or neglect to do so, the Owner may, at its opinion, determine that the Bidder has abandoned the Contract and thereupon the Proposal and acceptance shall be null and void, and bid security accompanying the Proposal shall be forfeited as liquidated damages to the Owner. If the party entering into this contract is a partnership, a partnership resolution duly executed by a majority of the general partners authorizing the partnership to enter into this contract shall be provided.

16. Bonds

The successful Bidder, at the time of the execution of the Contract, shall furnish a Performance Bond in an amount at least equal to one hundred percent (100%) of the Contract prices as security for the faithful performance of this Contract and also a Payment bond in an amount not less than one hundred percent (100%) for the Contract prices as security for the payment of all persons performing labor on the project under this Contract and furnishing materials in connection with this Contract. All Bonds shall be in the forms prescribed by Law or Regulation and be acceptable to the Owner. Surety companies executing Bonds must appear on the Treasury Department's most current list (Circular 570 as amended) and be authorized to transact business in the State of Connecticut. Bidder shall provide evidence that Surety Company is licensed to conduct business in the State of Connecticut. All sureties shall be in full force throughout the guarantee period and until the retainage is released.

17. Responsibility of the Contractor

Attention is hereby particularly directed to the provisions of the Contract and Specifications whereby the Contractor shall be responsible for any loss or damage that

may happen in the work, or any part thereof, during its progress and also whereby the Contractor shall make good any defects for faults that may occur within one (1) year after date of final estimate. He shall indemnify and save harmless the Owner and Engineer from any damages or costs to which they may be put by reason of injury to the person or property of another resulting from negligence or carelessness in the performance of the work under this Contract.

18. Insurance

Before execution of the Contract, the Bidder will be required to file with the City of Derby a certificate of insurance. The certificate, executed by an insurance company satisfactory to the City of Derby shall name the City of Derby as additional insured parties on the form furnished with these Contract Documents. The ACORD Certificate of Liability Insurance form is the industry accepted evidence of insurance and shall state that at a minimum, with respect to the contract, the bidder carries insurance in accordance with the requirements and stipulations listed below.

Unless requested otherwise by the City of Derby, the Bidder and its insurer shall not assert the defense of governmental immunity in the adjustment of claims or in the defense of any claim or suit brought against the City of Derby. The Bidder shall assume and pay all cost and billing for premiums and audit charges earned and payable under the required insurance.

A. Workmen's Compensation Insurance: With respect to all operations the Bidder performs and all those performed for it by subcontractors, the Bidder shall carry workmen's compensation insurance in accordance with the requirements and the laws of the State.

B. Contractor's Public Liability and Property Damage Insurance: With respect to the Project operations the Bidder performs and also those performed for it by subcontractors, the Bidder shall carry regular Contractor's Public Liability Insurance. The insurance shall provide coverage for each accident or occurrence in the amount of $2,000,000 for all damages resulting from (1) bodily injury to, or death of, persons and/or (2) injury to or destruction of property. Subject to that limit per accident or occurrence, the policy shall provide a total or aggregate coverage of $4,000,000 for all damages during the policy period.

C. Automobile Liability Insurance: The operation of all motor vehicles, including those hired or borrowed, used in connection with the project, shall be covered by Automobile Liability Insurance. The insurance shall provide coverage for each accident or occurrence in the amount of $2,000,000 for all damages resulting from (1) bodily injury to, or death of, persons and/or (2) injury to or destruction of property. If an insurance policy shows an aggregate limit as part of the automobile liability coverage, the aggregate limit must be at least $4,000.000.

D. With respect to the project operations the Bidder performs and also those

performed for it by subcontractors, the Bidder shall carry for and on behalf of the City of Derby, insurance which shall provide coverage for each accident or occurrence in the amount of $2,000,000 for all damages resulting from (1) bodily injury to or death of person and/or (2) injury to or destruction of property. Subject to that limit per accident or occurrence, the policy shall provide a total or aggregate coverage of $4,000,000 for all damages during the policy period.

E. Termination or change of Insurance: Each insurance policy shall be endorsed to provide that the insurance company shall notify the City of Derby by certified mail at least thirty (30) days in advance of termination, or any change in the policy. No such change shall be made without prior written approval of the appropriate Official.

F. Claims: Each insurance policy shall state that the insurance company shall agree to investigate and defend the City of Derby against all damages, even if groundless.

G. Compensation: There shall be no direct compensation allowed the Bidder on account of any premium or other change necessary to take out and keep in effect all insurance or bonds, but the cost thereof shall be considered included in the general cost of the work.

19. Care and Protection of Property

The Contractor shall take particular care to avoid damages to all private property and to private improvements within the City's right of way. He shall make good any damages to the satisfaction of the Inspector. There shall be no additional compensation for the repair or restoration of private property, or private improvements within the City's right of way. **See Special Provisions and Notices to Contractor for more specific requirements for Care and Protection of Property.**

20. Sales Tax

Certain materials and supplies incorporated in the work of this project are exempt from Connecticut Sales Tax. The Bidder shall familiarize himself with current regulations of the State Tax Department. The tax on materials or supplies exempted by such regulations shall not be included as part of the bid. The Owner will furnish the successful Bidder a sales tax exemption number.

21. Compliance with Federal and State Regulations

The Contractor shall be responsible for full compliance with any Federal and/or State laws, regulations and standards, as applicable to any project fully or partially funded by State and/or Federal funding agency. This project is funded, in part, by the Federal government. See Federal Clauses and Certification Section.

22. Permits

All licenses and permits for complying with any applicable Federal, State, and Municipal laws, codes and regulations in connection with the prosecution of the work shall be obtained by the Contractor, at no additional cost to the Owner.

23. CHRO Contract Compliance Regulations

This section is not applicable to this contract.

24. Sedimentation and Erosion Control Plan

The Contractor shall prepare and submit a sedimentation and erosion control plan prior to beginning any work.

25. Contractor's Right to Terminate Work

If the work should be stopped under an order of any court or other public authority, for a consecutive period of not less than thirty (30) days, through no act or fault of the Contractor or of anyone employed by him, then the Contractor may terminate this Contract and recover from the Owner payment for all work executed.

26. Wage Rates

The Bidder's attention is directed to Article Labeled "Davis-Bacon and Copeland Anti-Kickback Acts" of the Contract Forms Section on Federal Contract Clauses in connection with wage rates.

27. Power of Attorney

Attorneys-in-fact who sign contract bonds must file, with each bond, a certified and effectively dated copy of their power of attorney.

28. Right to Reject

The Owner reserves the right to reject any or all proposals or to accept any bid, should it deem it to be in the best interest of the Owner.

Protest Procedures

A. GENERAL DEFINITIONS

1. The procedures established hereunder shall be available to contractors for the purpose of handling and resolving disputes relating to procurements hereunder. A protestor must exhaust all administrative remedies hereunder before pursuing a protest in any court of law.

2. The term “contractor” means any person, firm, or corporation, which has contracted or seeks to contract with the City of Derby.

3. The term “hearing officer” shall mean a person, appointed by the City of Derby Board, to hear and decide allegations made by any contractor relating to procurements hereunder.

4. A “pre-bid or solicitation phase protest” is a written protest received prior to the bid opening or proposal due date.

5. A “pre-award protest” is a protest against making an award and is received after receipt of proposals or bids, but before award of a contract.

6. A “post-award protest” is a protest received after award of a contract.

B. FILING OF PROTESTS

1. Pre-Bid Protest: Any Contractor may file a written protest of the procurement procedures involved herein, with the City of Derby at least five (5) working days before the bid opening or proposal due date.

2. Pre-Award Protest: Any Contractor my file a written protest against the City of Derby’s making of an award after the City of Derby’s making of an award after the City of Derby’s receipt of bids or proposals, but at least five (5) working days before the conditional award of a contract by the City of Derby.

3. Post-Award Protest: Any contractor may file a written protest of the procurement procedures involved herein, with the City of Derby, no more than five (5) working days after the date of the City of Derby’s Decision regarding a selection of a contractor with respect to the RFP.

4. Each protest must clearly state:

a. The name, address, and telephone number of the protester;
b. The solicitation/contract number or description thereof.
c. A statement of all of the grounds upon which the protest is made.

5. Protests are to be filed by certified mail, return receipt requested or by personal delivery by 4:30pm on or before the due date at:

City of Derby
1 Elizabeth Street, Derby, CT 06418

If protests are filed by personal delivery, the protestor must obtain a time-stamped copy of the protest from the Purchasing Department as proof of the date and time of the filing of the protest. It is the Protester's sole responsibility to provide said copy at the time of filing.

C. HEARING PROCEDURE

1. A hearing shall be conducted in accordance with C.G.S. Section 4-176e through 418a, as amended, which are incorporated herein, provided that if there is a conflict between Section 4-176e and these Written Protest Procedures, the latter will prevail . The hearing officer shall issue a written decision within ten (10) days of the last date of such hearing and state in the decision the reasons for the action taken. The Hearing Officer, shall respond in detail, to each substantive issue raised in the protest.

2. The Hearing Officer shall be the responsible official who has the authority to make the final determination of the protest.

3. The Hearing Officer shall address, in his determination, each material issue raised in the protest.

4. The Hearing Officer's determination shall be final and bending upon all parties upon issuance.

5. Within (5) working days from its receipt of the decision of the Hearing Officer, a protester may request reconsideration of the decision, using the same procedure described in Section B.5 above. The request for reconsideration shall be addressed to the Hearing Officer, City of Derby, 1 Elizabeth Street, Derby, CT 06418

The request for reconsideration shall set forth all of the grounds upon which the request is made.

6. The Hearing Officer shall issue a written decision on the request for recommendation within ten (10) days of receipt thereof and state in the decision the reasons for the granting or denial of the request.

D. Post-determination protests may include allegations that the City of Derby failed to have or follow written protest procedures

PROPOSAL FORMS/BID FORMS

PROPOSAL/BID FORM

City of Derby

O'Sullivan Island Fishing & Viewing Platform
HRP Project Number NAU3003.CE

The undersigned, as Bidder, declares that no person or persons, other than those named herein, are interested in this Proposal; that this Proposal is made without collusion with any person, firm or corporation; that he has carefully examined the location of the proposed work, the proposed Form of Contract, and the Contract Drawings therein referred to; that no person or persons acting in any official capacity for the Owner is directly or indirectly interested therein or in any portion of the profit thereof; and that he proposes and agrees, if this Proposal is accepted, to execute the Form of Contract with the Owner; to provide all necessary equipment, tools, and other means of construction, and to do all work and furnish all materials specified in the Contract, in the manner and time therein prescribed, and according to the requirements of the City of Derby Inspector as therein set forth, and that he will take in full payment therefore, the following unit prices and lump sums, to wit:

The Bidder acknowledges receipt of the following addenda:

Addendum No._____ Dated: _____

Addendum No._____ Dated: _____

Addendum No._____ Dated: _____

Addendum No._____ Dated: _____

Addendum No._____ Dated: _____

Addendum No._____ Dated: _____

The undersigned agrees that he shall execute the Contract within the ten (10) days after the date of award, and shall commence work within the ten (10) days after date of the Notice to Proceed and shall progress therewith to its entire completion within the time stipulated in the Contract.

The Bidder agrees that this bid shall be good and may not be withdrawn for a period of ninety (90) days after the scheduled closing time for receiving bids.

If this Proposal shall be accepted by the Owner and the undersigned shall fail to contract as aforesaid, and to give bonds in a sum equal to one hundred percent (100%) of the Contract price, as determined by the canvass of bids, and with surety or sureties satisfactory to the Owner within ten (10) days from the date of the award, then the Owner may, at its option, determine that the Bidder has abandoned the Contract: thereupon, the Proposal and acceptance shall be null and void, and the bid security, for not less than one-tenth (10%) of the amount of the bid, accompanying this Proposal, shall become the property of the said Owner as liquidated damages for the delay and additional expense to the Owner caused thereby if said Proposal shall be rejected, or if said Proposal shall be accepted and the Bidder shall execute and deliver a contract in the Form of Contract attached hereto (properly completed in accordance with said Proposal) and shall furnish a Bond for his faithful performance of said Contract, and for the payment of all persons performing labor or furnishing materials in connection therewith, and shall in all other respects perform the agreement created by the acceptance of said Proposal, the accompanying bid security shall be returned to the undersigned making bid.

Seal
(if bid is by a Corporation)

Firm or Corporation_____

By:_____
(Duly Authorized)

Street Address_____

City_____ State_____ Zip_____

Telephone _____

Fax _____

_____
Date

City of Derby
Invitation to Bid
O'Sullivan's Island Fishing and Viewing Platform

Major and Minor Contract Items

Item Number	Item Name	Unit	Approximate Quantities	Unit Prices Bid		Amount (figures)
				Figures	Words	
1	Contractor General Conditions*	LS	1			
2	Mobilization/Demobilization	LS	1			
3	Bituminous Concrete Walk 6' x 90' (includes aggregate base)	SY	60			
4	Concrete Pad 4' x 12'	LS	1			
5	Trees	EA	8			
6	Pier Construction with Wooden Piles and Handrails	LS	1			
7	Dolphin Piles	EA	7			
8	E&S Control During Construction (includes turbidity curtain)	LS	1			
9	Furnishing and Placing Topsoil, Turf Establishment	LS	1			
10	Site Sign	LS	1			

Assumptions:

1. Soil removal and excavation under separate contract.
2. All items of work not specifically called out for payment shall be paid for under (Contractor General Conditions).

Base Bid Total (in words)	**(in figures)**
_____	$_____
_____	

"Unit Price" amounts are to be shown in both words and figures. In case of discrepancy, the amount shown in words will govern. In case of discrepancy between "Unit Price" and "Total Amount", the unit price will govern.

The award of the Contract will be made to the lowest responsible bidder. By submission of the Bid, each bidder certifies that his bid has been arrived at independently, without consultation, communication, or agreement as to any matter related to this Bid and with any other Bidder or competitor.

Signature	Date
Print Name	Tel
Corporation Name	Fax
Address	E-mail

REFERENCES

The Bidder is required to fill out the following form to enable the Owner to make inquiries and judge as to the Bidder's experience, skill, available financial resources, credit, and business standing.

1. Number of years the bidder has been in business as a General Contractor: _____

2. List three (3) projects of similar nature to the project described herein that the Bidder has completed, with name, address, and telephone number of a reference for each project. Include approximate construction cost:

_____

_____

_____

_____

_____

_____

_____

3. List projects presently under construction by the Bidder, dollar amount of the contract, and percent completed:

_____

_____

_____

_____

_____

_____

_____

4. Has the Bidder ever failed to complete work awarded; and if so, state where and why:

_____

_____

_____

5. Does the Bidder plan to sublet any part of this work; and if so, give details:

_____

_____

_____

_____

_____

6. List equipment Bidder owns that is available for this project:

_____

_____

_____

_____

_____

_____

_____

_____

7. List equipment the Bidder plans to rent or purchase for this project:

_____

_____

_____

_____

_____

_____

_____

8. If the Bidder has worked under the direction of a CT Department of Transportation or municipal inspector, list recent projects with the name, address, and telephone number of the inspector:

_____

_____

_____

_____

9. List name, address, and telephone number for the following:

Surety:_____

Bank:_____

Major Material Supplier: _____

_____
Bidder

BID BOND

KNOW ALL MEN BY THESE PRESENTS, that we, the undersigned,

as Principal, and _____as Surety, are

hereby held and firmly bound unto _____as OWNER in the penal sum of

_____

for the payment of which, well and truly to be made, we hereby jointly and severally bind

ourselves, successors and assigns.

Signed, this _____ day of _____, 20___.

The Condition of the above obligation is such that whereas the Principal has submitted to

_____a certain BID, attached hereto and hereby made a part hereof to enter into a

contract in writing, for O'Sullivan Island Fishing & Viewing Platform, HRP Project No. NAU3003.CE.

NOW, THEREFORE,

(a) If said BID shall be rejected, or

(b) If said BID shall be accepted and the Principal shall execute and deliver a contract in the Form of Contract attached hereto (properly completed in accordance with said BID) and shall furnish a BOND for his faithful performance of said contract, and for the payment of all persons performing labor or furnishing materials in connection therewith, and shall in all other respects perform the agreement created by the acceptance of said BID,

then this obligation shall be void, otherwise the same shall remain in force and effect; it being expressly understood and agreed that the liability of the Surety for any and all claims hereunder shall, in no event, exceed the penal amount of this obligation as herein stated.

The Surety, for value received, hereby stipulates and agrees that the obligations of said Surety and its BOND shall be in no way impaired or affected by any extension of the time within which the OWNER may accept such BID; and said Surety does hereby waive notice of any such extension.

IN WITNESS WHEREOF, the Principal and the Surety have hereunto set their hands and seals, and such of them as are corporations have caused their corporate seals to be hereto affixed and these presents to be signed by their proper officers, the day and year first set forth above.

_____(L.S.)
Principal

_____
Surety

By:_____

IMPORTANT - Surety companies executing BONDS must appear on the Treasury Department's most current list (Circular 570 as amended) and be authorized to transact business in the state where the project is located.

CONTRACT FORMS

CONTRACT AND AGREEMENT

THIS AGREEMENT, for O'Sullivan Island Fishing & Viewing Platform, HRP Project No. NAU3003.CE made this _____ day of _____ in the year 20___, Between the City of Derby, with its principal office and place of business at 1 Elizabeth Street, Connecticut 06148, acting herein through it's Mayor and _____ , a _____ , with an office and place of business at _____, hereinafter called the Contractor.

WITNESSETH: That the parties to this agreement in consideration of the undertakings, promises, and agreements on the part of the other herein contained, hereby undertake, promise, and agree as follows:

I Definitions

The word "Owner" as used herein shall mean the City of Derby, acting through its properly authorized representatives.

The words "as directed", "as required", "as permitted", "as allowed", or phrases of like effect or import, used herein shall mean that the direction, requirement, permission, or allowance of the City of Derby Inspector is intended and similarly the words "approved", "reasonable", "suitable", "proper", "satisfactory", or words of like effect or import, unless otherwise particular specified herein, shall mean approved, reasonable, suitable, proper, or satisfactory in the judgment of the City of Derby Inspector.

The word "Contractor" shall mean _____or it's duly authorized agents.

II Contract Includes

The indices, headings and subheadings are for convenience only and do not form a part of the Contract Documents.

The Contractor shall, at his own sole cost and expense, furnish all labor, materials, and other services necessary for the completion of this Contract and shall complete and finish the same in the most thorough, workmanlike, and substantial manner, in every respect, to the satisfaction and approval of the City of Derby Inspector, in the manner and within the time hereinafter limited, and in strict accordance with the Advertisement, Information for Bidders, Proposal, Contract Forms, General Requirements, Supplemental Specifications, Standard Specifications, Special Provisions and Addenda hereto attached, and the Contract Drawings herein referred to, (collectively the "contract documents"), which contract documents are hereby made a part of this Contract as fully as if the same were repeated at length herein.

Addendum No. ___	Dated: _____	Addendum No. ___	Dated: _____
Addendum No. ___	Dated: _____	Addendum No. ___	Dated: _____
Addendum No. ___	Dated: _____	Addendum No. ___	Dated: _____

III Specifications and Contract Drawings Supplementary

The said standard and supplemental specifications, special provisions and Contract Drawings are intended to supplement each other, and together constitute one complete set of Contract Documents, so that any work exhibited in the one and not in the other shall be executed just as if it had been set forth in both, in order that the work shall be completed in every respect according to the complete design or designs as decided and determined by the City of Derby Inspector. Should anything be omitted from the Specifications and Contract Drawings, the Contractor shall promptly notify the City of Derby Inspector. From time to time during the progress of the work, the City of Derby Inspector may furnish such supplementary or working drawings as are necessary to show changes or define the work in more detail, and these also shall be considered as Contract Drawings.

IV Modifications

The Contractor, in entering into this Contract, understands that the Owner reserves the right to modify, to the extent herein provided, the arrangement, character, grade, or size of the work or appurtenances whenever, in the Owner's opinion, it shall be deemed necessary or advisable to do so. Minor changes in the work, not involving extra cost and consistent with the purposes of the work, may be made by verbal order, but no modifications involving extra work or material changes shall be made unless ordered in writing by the City of Derby Inspector; and if the modification requires additional cost, a purchase order must be issued prior to work commencing. The Contractor shall and will accept such modifications when ordered in writing by the Owner through the City of Derby Inspector, and the same shall not vitiate or void this Contract. Any changes involving extra work or material changes shall be submitted for approval with an itemized cost breakdown, including unit costs and any mark-up / profit.

Any such modifications so made shall not, however, subject the Contractor to increased expense without equitable compensation, which shall be determined by the City of Derby Inspector. If such modifications result in a decrease in the cost of work involved, and equitable deduction from the Contract price, to be determined by the City of Derby Inspector, shall be made. The City of Derby Inspector's determination of such additional compensation, or of any such deduction, shall be based upon the unit prices in the Contractor's bid, unless the modification involves work not included in such bids and then in the event, the modification shall be as set forth in Section XXVIII prior to the commencement of additional work. In no event shall any modification in the work shown on the Plans and Specifications be made unless the nature and extent thereof has first been certified by the City of Derby Inspector in writing and sent to the Contractor.

V Correction of Errors and Omissions

The Plans, Standards and Specifications and Special Provisions forming part of this Contract are intended to be explanatory of each other, but should any discrepancy appear, or misunderstanding arise, as to the import of anything contained in either, the explanation and decision of the City of Derby Inspector shall be final and binding on the Contractor; and all directions and explanations required, to complete and make effective any of the provisions of the Contract and Specifications, shall be given by the City of Derby Inspector. Corrections of errors and omissions in the Drawings, Standard or Special Provisions may be made by the City of Derby Inspector when such corrections are necessary for the proper fulfillment of the Contract Documents as construed by the City of Derby Inspector. The effect of such corrections shall date from the time that the City of Derby Inspector gives due notice thereof to the Contractor.

VI City of Derby Inspector's Decision

All work under this Contract shall be done to the satisfaction of the City of Derby Inspector, who shall determine the amount, quality, acceptability, and fitness of the several items of work and materials which are to be paid for hereunder. He/She also shall decide all questions which may arise as to the fulfillment of the terms of the Contract Documents.

The determination of the City of Derby Inspector in all such matters shall be final and binding upon the parties thereto.

VII Inspection of Work

It is agreed that the Owner may, at its pleasure, appoint and employ, at its own expense, such persons as may be necessary, who are to act as City of Derby Inspectors, engineers, or agents, for the purpose of determining, in the City's interest, that the materials furnished and the work done, as the work progresses, conforms to the requirements of the Contract Documents. Such persons shall have unrestricted access to all parts of the work and to other places at and where the preparation of the materials and other parts of the work to be done under this Contract are carried on and conducted. They shall be given, by the Contractor, all facilities and assistance required to carry out their work of inspection.

It is not the function of the City of Derby Inspector to supervise or direct the manner in which the work to be done under this Contract is carried on or conducted. The City of Derby Inspector is not responsible for construction means, methods, techniques, sequences, or procedures, or for safety precautions and programs in connection with the work, and he/she will not be responsible for the Contractor's failure to carry out the work in accordance with the Contract Documents.

The City of Derby Inspector shall have authority to reject and shall reject any work or material, or any part thereof, which does not, in his/her opinion, conform to the Contract Drawings, working drawings, Standard Specifications, Special Provisions and Contract, and it shall be permissible for him/her to do so at any time during the progress of the work.

No work shall be done unless the City of Derby Inspector or his/her assistants have been notified and given ample time to be present. No material of any kind shall be used upon the work until it has been inspected and accepted by the City of Derby Inspector. Any materials or workmanship found at any time to be defective, or not of the quality or character required by the Contract Drawings, Standard Specifications and Special Provisions shall be remedied at once regardless of previous inspection.

Such inspection shall not relieve the Contractor from any obligation to perform said work strictly in accordance with the Contract Drawings and Project Manual and work not so constructed shall be removed and made good by the Contractor at this own expense and free of all expense to the Owner, whenever so ordered by the Owner, without reference to any previous oversight or error in inspection.

VIII Address of Contractor

The address in the Proposal, upon which this Contract is based, shall be the Contractor’s place of business as set forth in this agreement. The delivering at the above-named place any such notice, letter, or other communication to the Contractor shall be deemed proper service to the Contractor. The notice letter or other communication may be mailed or delivered, from the City to the Contractor. The date of said service shall be the date of such delivery. Nothing herein contained shall be deemed to preclude or render inoperative the service of any notice, letter, or other communication upon the Contractor or his representative personally.

IX Obligation of the Contractor

The Contractor shall, at his own expense, provide any and all manner of supervisor, insurance, taxes, labor, materials, apparatus, scaffolding, appliances, tools, machinery, power, transportation, and whatever else may be required of every description necessary to do and complete the work and shall be solely answerable for the same and for the safe, proper, and lawful construction, maintenance, and use thereof. The Contractor shall cover and protect the work from damage and shall make good all injury to the same occurring before completion of this Contract. The Contractor shall employ only competent workmen and shall provide

experienced superintendents and foremen on each part of the work.

The Contractor shall, at their own expense, wherever necessary or required, maintain fences, provide watchmen, maintain lights, place additional timber and braces, and take such other precautions as may be necessary to protect life, property, and structures, vehicles and pedestrians and shall be liable for all damages, occasioned in any way by his act or neglect or that of this agent, employees, or workmen. He shall provide access at all times to private property.

X Occupational Safety and Health Act

The applicable sections of the Occupational Safety and Health Act of 1970 (Williams-Steiger Act) shall apply and be made a part of this Contract. The Contractor's attention is particularly directed to the record keeping requirements of this Act.

XI Nondiscrimination in Employment

The Contractor agrees and warrants that, in the performance of this Contract, he will not discriminate or permit discrimination against any person or group of persons on the grounds of race, color, sex, religion, or national origin in any manner prohibited by State, Federal, County or Municipal law.

XII Personal Attention and Competent Workmen

The Contractor shall give his personal attention constantly to the faithful prosecution of the work and shall be present, either in person or by a duly authorized representative, on the site of the work continually during its progress to receive directions or instructions from the City of Derby Inspector. The Contractor shall employ at the site, during the performance of the work, a competent superintendent or foreman who shall be satisfactory to the City of Derby Inspector and who shall not be changed, except with the consent of the City of Derby Inspector, unless he shall cease to be an employee of the Contractor. Such superintendent or foreman shall represent and have full authority to act for the Contractor in his absence, and all directions and instructions given such superintendent or foreman shall be as binding as if given to the Contractor.

The Contractor shall employ only competent, skillful people to do the work, and whenever the City of Derby Inspector shall notify the Contractor in writing that any person on the work is, in his opinion, incompetent, unfaithful, disorderly, or otherwise unsatisfactory, such person shall be discharged from the work and shall not again be employed on it, except with the consent of the City of Derby Inspector.

XIII Public Safeguards

The Contractor agrees to conduct the work at all times in such a manner that public travel shall not be inconvenienced needlessly nor shall it be wholly obstructed at any point.

XIV Materials and Workmanship

It is the intent of the Specifications to describe fully and definitely the character of materials and workmanship furnished regarding all ordinary features and to require first-class work and materials in all particulars. For any unexpected features arising during the progress of the work and not fully covered herein, the Specifications shall be interpreted by the City of Derby Inspector to require first class work and materials in all respects, and such interpretation shall be accepted by the Contractor.

XV Materials and Manufactured Articles

All materials and workmanship shall be subject to the approval of the City of

Derby Inspector and shall be in conformity with approved modern practice.

Unless otherwise specifically provided for in the Project Manual, all materials incorporated in the work shall be new, of standard and first-class quality, and of the best workmanship and design. No inferior or low grade, material will be either approved or accepted, and all work of assembly and construction must be done in a neat, first-class, and workmanlike manner.

XVI Unnoticed Defects

The inspection of the work and materials by the City of Derby Inspector shall not relieve the Contractor of any of his obligations to fulfill this Contract, as herein described, and defective work shall be made good and unsuitable materials shall be rejected, notwithstanding that such work and materials had been previously overlooked by the City of Derby Inspector and accepted or estimated for payment. If the work, or any part thereof, shall be found defective at any time before final acceptance of the whole work, the Contractor shall forthwith make good such defects, in a manner satisfactory to the City of Derby Inspector.

XVII Care and Protection of Work

From the commencement of the work until the completion of the same, the Contractor shall be solely responsible for the care of the work covered by the Contract and for the materials delivered at the site intended to be used in the work; and all injury, damage, or loss of the same, from whatever cause, shall be made good at his expense before the final estimate is made. He shall provide suitable means of protection for all materials intended to be used in the work and for all work in progress as well as for completed work. He shall take all necessary precautions to prevent injury or damage to the work under construction by flood, freezing or inclement weather at any and all times. The methods used for this purpose shall be subject to the approval of the City of Derby Inspector, but shall not relieve the Contractor from liability for inadequate protection of the work or materials.

XVIII Assignment of Contract

The Contractor shall have no right or power to assign this Contact, in whole or in part, nor to assign any right arising, or moneys due or to grow due thereunder, without prior written approval of the Owner.

XIX Subcontracting

The Contractor may utilize the services of specialty subcontractors on those parts of the work which, under normal contracting practices, are performed by specialty subcontractors. The Contractor shall not award any part of the work to a subcontractor(s) without prior written approval of the Owner. The Contractor shall be fully responsible to the Owner for the acts and omissions of his subcontractors, and of persons either directly or indirectly employed by them, as he is for the acts and omissions of persons directly employed by him.

The Contractor shall cause appropriate provisions to be inserted in all subcontracts relative to the work to bind subcontractors to the Contractor by the terms of these Contract Documents, insofar as applicable to the work of subcontractors, and to give the Contractor the same power as regards terminating any subcontract that the Owner may exercise over the Contractor under any provisions of these Contract Documents.

Nothing contained in this contract shall create any contractual relation between any subcontractor and the Owner.

XX Liability of Contractor for Employees

Each and every employee of the Contractor and each and every of his subcontractors engaged in the said work shall, for all purposes, be deemed and taken to be the exclusive servants of the Contractor and not for any purpose or in any manner in the employment of the Owner. The Contractor shall, in no manner, be relieved from responsibility or liability on account of any fault or delay in the execution of the said work, or any part thereof, by any such employee, or any such subcontractor, or any material men, whatsoever.

XXI Coordination With Other Contractors and Utilities

During the progress of the work, existing utilities may be found to be in close proximity to or in conflict with the work being installed. The Contractor shall make every effort to identify and locate these utilities before working in the area. If it is known or found that these utilities exist the Contractor shall contact the appropriate utility and alert them to the situation. Should an existing utility be found to be in close proximity to the work the Contractor shall take all the necessary precautions to protect the utilities and his work. Should existing utilities be found to conflict with the work the Contractor shall arrange with the utility company for their adjustment. No additional compensation will be made for delays, inconvenience or damage sustained by the Contractor due to interference from the above-noted utility appurtenances or the operation of locating, installing or moving them or the inability of others to perform their work in a timely manner.

XXII Permits, Laws, Codes, Ordinances and Insurance

The Contractor shall keep himself fully informed of all existing and current codes, ordinances, and regulations and Municipal, County, State or National laws in any way limiting or controlling the actions or operations of those engaged upon the work or affecting the materials supplied to or by them. He shall, at all times, observe and comply with all such valid and legally binding ordinances, laws, and regulations and shall protect and indemnify the Owner and its representatives and agents against any claim or liability arising from, or based on, any violation of the same. He shall obtain and pay for all necessary permits and pay all fees required in connection with the Contract. Contractor shall provide the types and amounts of insurance as set forth in Section 19, Information of Bidders and maintain in effect. He shall take out and carry appropriate employer's liability insurance and public liability insurance.

XXIII Patent Rights

The Contractor shall indemnify and save harmless the Owner and its officers, agents, and representatives from all claims for damages arising from the infringements, or alleged infringements, of any Letters Patent or patent rights covering any material, appliance, or device used in or upon the work or any part thereof.

All royalties for patents or patent infringement claims, that might be involved in the construction or use of the work, shall be included in the Contract amount; and the Contractor shall satisfy all demands that may be made at any time for such and shall be liable for any damage or claims for patent infringements; and the Contractor shall, at his own expense, defend any and all suits or proceedings that may be instituted against the Owner for infringement, or alleged infringement, of any patent or patents involved, or alleged to be involved, in the work; and in case of any award for damages, the said Contractor shall pay such award.

XXIV Defense of Suits

The Contractor shall indemnify and hold harmless the Owner and it's consultants, agents and employees from and against all claims, damages, losses, and expenses, including, but not limited to, attorney fees, ("indemnification expense") arising out of or resulting from the performance of the work or arising out of or resulting from the Contract Documents, including, without limitation, all indemnification expense regarding personal injury or death and/or damage

to real or personal property or motor vehicles.

In claims against any person or entity indemnified under this section by an employee or the Contractor, a Subcontractor, anyone directly or indirectly employed by them or anyone for whose acts they may be liable, the indemnification obligation under this Section shall not be limited by a limitation on amount or type of damages, compensation or benefits payable by or for the Contractor or a Subcontractor under worker's or workmen's compensation acts, disability benefit acts or other employee benefit acts.

XXV Claims for Labor and Materials

The Contractor shall indemnify and save harmless the Owner from all claims expenses and for judgments regarding labor done or materials furnished under this Contract, or any alterations or modifications thereof, including without limitation, reasonable Attorney's fees. Contractor shall furnish the Owner with a Mechanic's Lien Waiver from all persons who have done work, or furnished materials under this Contract. In case such waiver is not furnished, an amount necessary or sufficient, within the discretion of the Owner, to meet the claims of the persons aforesaid, shall be retained, as herein specified, from the money due the Contractor under this Contract until the liabilities aforesaid shall be fully discharged or satisfactorily secured.

XXVI Completion of Work by Owner

If the work to be done under this Contract shall be abandoned by the Contractor; or if this Contract shall be assigned, or the work sublet by him, otherwise than as herein specified; or if at any time the Owner shall be of the opinion that the performance of the Contract is unnecessarily or unreasonably delayed; or if the Contractor is willfully violating any of the conditions or covenants of this Contract, or of the Specifications, or is executing the same in bad faith or not in accordance with the terms thereof; of if the work be not fully completed within the time named in this Contract for its completion, or within the time to which the completion of the Contract may be extended by the Owner, the Owner may notify the Contractor to discontinue all work, or any part thereof under his Contract, by a written notice to be served upon the Contractor as herein provided.

The Contractor shall, within five (5) days of the service of said written notice, discontinue the work, or such part thereof, and the Owner shall thereupon have the power to contract for the completion of the Contract, in the manner prescribed by law; or to place such and so many persons as it may be deemed advisable, by contract or otherwise, to work, and complete the work herein described, or such part thereof; or to take possession of and use any of the materials, plant, tools, equipment, supplies, and property of every kind provided by the Contractor for the purpose of his work; and to procure other materials and equipment for the completion of the same; and to charge the expense of said labor, materials and equipment to the Contractor.

The expense so charged shall be deducted and paid by the Owner out of such moneys as may be due, or may at any time thereafter grow due to the Contractor under and by virtue of this Contract, or any art thereof; and in case such expense shall exceed the amount which would have been payable under the Contract, if the same had been completed by the Contractor, the Contractor or his surety shall pay the amount of such excess to the Owner within five (5) days of written demand therefore; and in case such expense shall be less than the amount which would have been payable under this Contract, if the same had been completed by the Contractor, the owner shall pay such difference to the Contractor within five (5) days of written demand.

XXVII Partial and Final Estimates

Thirty (30) days after the execution date of this contract, and at the end of each thirty (30) day period thereafter for the term of this contract, Contractor will certify in writing to the City of Derby Inspector, via a payment application, the percentage of the

total work completed under the contract which Contractor has performed during the said thirty (30) day period. Such notification will itemize and accurately indicate the extent and nature of work performed by volume, and category or in any manner as required by the City and in accordance with the items identified in the Bid Proposal herein. Once the percentage of completed work items has been agreed upon and confirmed by the City of Derby Inspector, the payment application will be submitted to the City for final approval and payment.

The Owner will pay the Contractor, within 30 days of receipt of an estimate, ninety-five percent (95%) of the total estimated value of the work done, as estimated by the City of Derby Inspector less previous payments. Partial payments will not be made whenever the amounts of the estimate or estimates of work done since the last previous estimate are less than $2,000.00.

The City of Derby Inspector shall, as soon as practicable after the completion of work, make a final certificate of the entire amount of the work done under this Contract, and the value thereof, and the Owner shall, within thirty (30) days after such final estimate is approved, pay the entire sum so found to be due hereunder, after deducting there from all previous payments and also all percentages and deductions to be retained under any of the provisions of this Contract.

Before payment of each estimate, the Contractor shall provide the Owner with a mechanic's lien waiver from the Contractor and all persons who have done work or furnished materials under this Contract.

XXVIII Payment

The Owner, in consideration of the faithful performance by the Contractor of all and singular his covenants, promises, and agreements contained herein, agrees to pay the Contractor for the full completion by him of the work embraced in this Contract, in the manner and within he time herein specified and limited, and to the satisfaction and approval of the City of Derby Inspector, the prices stipulated in the said Proposal hereto attached, such payment to be made at the times and in the manner and upon the conditions herein expressly provided. The Owner also agrees to pay in addition such amounts as may be agreed upon for modifications and for extra work.

XXIX Guarantee

The Contractor guarantees that the work done under this Contract and the materials furnished by him and used in the construction of the same are free from defects or flaws. The guarantee is for a term of one (1) year from, and after, the date upon which the final estimate of the City of Derby Inspector is formally approved by the Owner. It is hereby agreed and understood that this guarantee shall not include making any repairs made necessary by any cause or causes other than defective materials furnished by, or defective work done by, the Contractor.

XXX Rate of Progress and Time of Completion

The Contractor shall commence work within ten (10) calendar days of the date of the Notice to Proceed. The rate of progress shall be such that the whole work, inclusive of any add alternates, shall be performed and the grounds cleaned-up in accordance with Time for Completion, Section 3 of the supplemental conditions, unless extensions of time shall be made for the reasons, and in the manner, stated under Article XXXIII, "Extension of Time".

The allotted calendar days includes time for the Contractor to obtain approval of a Erosion and Sediment Control Plan, as applicable.

XXXI Extension of Time

The Contractor expressly covenants and agrees that, in undertaking to complete the work within the time mentioned, he has taken into consideration, and made allowance for, all of the ordinary delays and hindrances incidental to such work, whether growing out of delays in securing materials or workmen or otherwise. Should the Contractor, however, be substantially delayed in the prosecution and completion of the work by any changes, additions, or omissions therein ordered in writing by the City of Derby Inspector, or by fire, lightning, earthquake, tornado, cyclone, riot, insurrection, or war, or by the abandonment of the work by the workman engaged therein through no fault of the Contractor, or by the discharge of all or any

material number of workmen in consequence of difficulties arising between the Contractor and such workmen, or by the neglect, delay, or default of any other contractor of the Owner, then the Contractor may, within five (5) days after the occurrence of the delay for which he claims allowance, notify the City of Derby Inspector thereof in writing, and thereupon, and not otherwise, the Contractor shall be allowed such additional time for the completion of the work as the City of Derby Inspector, in his discretion, shall award in writing, and his decision shall be final and conclusive upon the parties.

XXXII Damages for Failure to Complete on Time

The Contractor shall pay to the Owner for each and every calendar day (including Saturdays, Sundays, and holidays) that he shall be in default in completing the entire work in the time stipulated in Article XXX, or within the extension of time he may be granted as provided in Article XXXIII, the sum of Six Hundred Dollars ($600) per day. This sum is hereby agreed upon not as a penalty but as liquidated damages which Owner will suffer by reason of such default, time being of the essence of the Contract and a material consideration thereof. The Owner shall have the right to deduct the amount of any such damages from any monies due the Contractor under this Contract.

XXXIII No Waiver of Rights

No certificate given or payment made under this Contract, except the final certificate or final payment, shall be evidence of the performance of the Contract either wholly or in part, and no payment shall be construed to be an acceptance of defective work or improper materials. No act of the Owner or of the City of Derby Inspector, or of any representatives of either of them in inspecting the work, nor any extension of time for the completion of the work, shall be regarded or taken as an acceptance of such work, or any part thereof, or materials used therein or thereof, either wholly or in part; but such acceptance shall be evidenced only by the final certificate of the City of Derby Inspector.

Before any final certification shall be allowed, the Contractor shall be required, and he hereby agrees, to sign and attest on said certificate a statement that he accepts the same in full payment and settlement of all claims on account of work done and material furnished under this Contract, and furthermore, that all claims for materials provided or labor performed have been paid and satisfied in full. No waiver of any breach of this Contract by the Owner or anyone acting for it, or on its behalf, shall be held as a waiver of any other or subsequent breach thereof.

XXXIV Mandatory Negotiation

Contractor and the Owner agree that they will attempt to negotiate in good faith any dispute of any nature arising under this contract. The parties shall negotiate in good faith at not less than two negotiation sessions prior to seeking any resolution of any dispute under the provisions of arbitration paragraph of this contract. Each party shall have the right to legal representation at any such negotiation session.

XXXV Arbitration

Any dispute or question arising under the provisions of this contract which has not been resolved under the mandatory negotiation paragraph of this contract shall be determined by arbitration. Arbitration proceedings shall occur at a neutral location in Waterbury, Connecticut, and shall be conducted in accordance with the rules then applicable of the American Arbitration Association. Arbitration shall proceed before a pane of one arbitrator to be selected by American Arbitration Association. The decision of the Arbitrator shall be final and may be entered in any court having jurisdiction thereof. Each party shall pay one-half of all costs and expenses of such arbitration.

XXXVI Owner's Right to Use

The Owner reserves the right to use or occupy any portion of the work considered by the City of Derby Inspector as ready for use or occupancy. Such use or occupancy shall not be held, in any way, as final acceptance of the work or any portion thereof, or as a waiver of any portion of this Contract.

XXXVII Verification of Data

The quantities of work to be done and the materials to be furnished under this Contract, as given in the accompanying "Information for Bidders" and on the Proposal form, are approximate estimates for the purpose of comparing bids on a uniform basis. Neither the Owner nor the City of Derby Inspector are to be held responsible for the data or information given relative to said quantities or that given on the Plans relative to existing conditions. The Contractor has judged for himself as to such quantities and as to other circumstances affecting the cost of the performance of this Contract, and he shall not at any time assert that there was any misunderstanding in regard to the character or amount of work to be done and materials and labor to be furnished.

XXXVIII Contractor's Wage Certification Form

If applicable the Contractor or his authorized agent will be required to sign the Contractor's Wage Certification Form at the time of Contract execution.

XXXIX Verbal Statements Not Binding

It is understood and agreed that the written terms and provisions of this Agreement shall supersede all prior verbal statements of the City of Derby Inspector or other representatives of the Owner, and such statements shall not be effective or be construed as entering into or forming a part of, or altering in anyway whatsoever, the written Agreement.

XXXX Final Estimate Constitutes Release

It is agreed that acceptance by the Contractor of the last payment made, under the provisions of Article XXVII, shall operate as and shall be a release to the Owner, and every agent thereof, from all claims and liability to Contractor for anything done or furnished for, or relating to, the work or for any act or neglect of the Owner or any agent thereof.

No payment, however, final or otherwise, shall operate to release the Contractor or his sureties from any obligations under this Contract.

XXXXI Delays or Termination by Governmental Authorities

Notwithstanding any other provision(s) of this contract, the parties agree that in the event of a stop work order from the State Department of Energy and Environmental Protection, or any other State or Federal agency, no additional compensation will be made by Owner to Contractor for delays, inconvenience or damage sustained by Contractor due to such order, including, without limitation, damages for loss of use of equipment or idle equipment. Similarly, in the event of a termination of the project by the State DEEP or any other State or Federal agency, no additional compensation will be made by Owner to Contractor for the termination, or for any delay, inconvenience or damage sustained by Contractor due to such termination, including, without limitation, damages for loss of use of equipment or idle equipment. In the event of such termination, the City of Derby Inspector shall prepare a final certificate for the entire amount of work done up to the effective date of termination. The provisions of Sections XXIX (Guarantee) shall apply to all work completed as of the effective date of any stop Work order, as if the effective date was the date upon which the final estimate of

the City of Derby Inspector is formally approved by the City.

XXXXII Validity of Agreement

The provision of this Agreement shall be binding upon the Parties and their respective successor or assigns.

IN WITNESS WHEREOF, the said parties hereto have caused this instrument to be signed by their respective duly constituted officers, attested, and sealed pursuant to proper resolutions.

Signed and sealed
in the presence of

_____

_____ _____
City of Derby
Mayor

_____

_____ _____
(Duly Authorized)
Contractor

PERFORMANCE BOND

KNOW ALL MEN BY THESE PRESENTS: that

_____
(Name of Contractor)

_____
(Address of Contractor)

a _____, hereinafter called Principal and
(Corporation, Partnership, or Individual)

_____
(Name of Surety)

_____
(Address of Surety)

hereinafter called Surety, are held and firmly bound unto

_____
(Name of Owner)

_____
(Address of Owner)

hereinafter called OWNER, in the penal sum of _____Dollars, $(_____) in lawful money of the United States, for the payment of which sum well and truly to be made, we bind ourselves, successors, and assigns, jointly and severally, firmly by these presents.

THE CONDITION OF THIS OBLIGATION is such that whereas, the Principal entered into a certain contract with the OWNER, dated the _____ day of_____, 20_ _, a copy of which is hereto attached and made a part hereof for the construction of: O'Sullivan's Island Fishing & Viewing Platform.

NOW, THEREFORE, if the Principal shall well, truly and faithfully perform its duties, all the undertakings, covenants, terms, conditions, and agreements of said contract during the original term thereof, an any extensions thereof which may be granted by the OWNER, with or without notice to the Surety and during the one year guaranty period, and if he shall satisfy all claims and demands incurred under such contract, and shall fully indemnify and save harmless the OWNER from all costs and damages which may suffer by reason of failure to do so, and shall reimburse and repay the OWNER all outlay and expense which the OWNER may incur in making good any default, then this obligation shall be void; otherwise to remain in full force and effect. PROVIDED, FURTHER, that the said surety, for value received hereby stipulates and agrees that no change, extension of time, alteration or addition to the terms of the contract or to WORK to be performed thereunder or the SPECIFICATIONS accompanying the same shall in anyway affect its obligation on this BOND, and it does hereby waive notice of any such change, extension of time, alteration or addition to the terms of the contract or to the WORK or to the SPECIFICATIONS.

PROVIDED, FURTHER, that no final settlement between the OWNER and the CONTRACTOR shall abridge the right of any beneficiary hereunder, whose claim may be unsatisfied.

IN WITNESS WHEREOF, this instrument is executed in _____counterparts each one of Which shall be deemed an original, this the_____day of _____, 20_ _.

ATTEST:

Principal

_____ By _____(s)
(Principal) Secretary

(SEAL)

_____ _____
(Witness as to Principal) (Address)

_____ _____
(Address)

_____ _____
Surety

ATTEST:

_____
(Surety) Secretary

(SEAL)

_____ By_____
Witness as to Surety Attorney-in-Fact

_____ _____
(Address) (Address)

_____ _____

NOTES: Date of BOND must not be prior to date of Contract.
If CONTRACTOR is Partnership, all partners should execute BOND.

IMPORTANT: Surety companies executing BONDS must appear on the Treasury Department's most current list (Circular 570 as amended) and be authorized to transact business in the state where the PROJECT is located.

PAYMENT BOND

KNOW ALL MEN BY THESE PRESENTS: that

_____

(Name of Contractor)

_____

(Address of Contractor)

a _____, hereinafter called Principal and

(Corporation, Partnership, or Individual)

_____

(Name of Surety)

_____

(Address of Surety)

hereinafter called Surety, are held and firmly bound unto

_____

(Name of Owner)

_____

(Address of Owner)

hereinafter called OWNER, in the penal sum of

_____Dollars, $(_____)

in lawful money of the United States, for the payment of which sum well and truly to be made, we bind ourselves, successors, and assigns, jointly and severally, firmly by these presents.

THE CONDITION OF THIS OBLIGATION is such that whereas, the Principal entered into a certain contract with the OWNER, dated the _____day of _____ , 20__, a copy of which is hereto attached and made a part hereof for the construction of: O'Sullivan's Island Fishing & Viewing Platform.

NOW, THEREFORE, if the Principal shall well, truly and faithfully perform its duties, all the undertakings, covenants, terms, conditions, and agreements of said contract during the original term thereof, an any extensions thereof which may be granted by the OWNER, with or without notice to the Surety and during the one year guaranty period, and if he shall satisfy all claims and demands incurred under such contract, and shall fully indemnify and save harmless the OWNER from all costs and damages which may suffer by reason of failure to do so, and shall reimburse and repay the OWNER all outlay and expense which the OWNER may incur in making good any default, then this obligation shall be void; otherwise to remain in full force and effect.

PROVIDED, FURTHER, that the said surety, for value received hereby stipulates and agrees that no change, extension of time, alteration or addition to the terms of the contract or to WORK to be performed thereunder or the SPECIFICATIONS accompanying the same shall in anyway affect its obligation on this BOND, and it does hereby waive notice of any such change, extension of time, alteration or addition to the terms of the contract or to the WORK or to the SPECIFICATIONS.

PROVIDED, FURTHER, that no final settlement between the OWNER and the CONTRACTOR shall abridge the right of any beneficiary hereunder, whose claim may be unsatisfied.

IN WITNESS WHEREOF, this instrument is executed in _____counterparts each one of which shall be deemed an original, this the_____day of _____, 20__.

ATTEST:

Principal

_____ By _____(s)
(Principal) Secretary

(SEAL)

_____ _____
(Witness as to Principal) (Address)

_____ _____
(Address)

_____ _____
Surety

ATTEST:

_____
(Surety) Secretary

(SEAL)

_____ By_____
Witness as to Surety Attorney-in-Fact

_____ _____
(Address) (Address)

_____ _____

NOTES: Date of BOND must not be prior to date of Contract.
If CONTRACTOR is Partnership, all partners should execute BOND.

IMPORTANT: Surety companies executing BONDS must appear on the Treasury Department's most current list (Circular 570 as amended) and be authorized to transact business in the state where the PROJECT is located.

STATE OF CONNECTICUT
LABOR DEPARTMENT

REGULATION OF WAGES

CONTRACTORS WAGE CERTIFICATION FORM

I, _____ of _____

do hereby certify that the _____
Company Name

_____
Street

_____
City, State, Zip Code

and all of its subcontractors will pay all workers on the

O'Sullivan's Island Fishing & Viewing Platform Project No. NAU3003.CE

_____
City of Derby

the wages as listed in the schedule or prevailing rates required for such project (a copy of which is attached hereto).

_____
Signed

Subscribed and sworn to before me this _____day _____ , 20__.

_____
Notary Public

Return to: Mayor's Office
City of Derby, CT

Town Attorney Certification

CERTIFICATE OF OWNER'S ATTORNEY

I, the undersigned,_____

the duly authorized and acting legal representative of_____

do hereby certify as follows:

I have examined the attached Contract (s) and surety bonds and the manner of execution thereof, and I am of the opinion that each of the aforesaid Agreements have been duly executed by the proper parties thereto acting through their duly authorized representatives; that said representatives have full power and authority to execute said Agreements on behalf of the respective parties named thereon; and that the foregoing Agreements constitute valid and legally binding obligations upon the parties executing the same in accordance with terms, conditions, and provisions thereof.

Town Attorney_____ Date:_____

Department of Revenue Services
Discovery Unit
25 Sigourney Street
Hartford CT 06106-5032
(Rev. 10/05)

Form AU-766
Guarantee Bond

Purpose: A nonresident contractor working in Connecticut and a surety company licensed to do business in Connecticut use **Form AU-766** to post a guarantee bond with the Department of Revenue Services (DRS) for a specific project in the state. The guarantee bond ensures all taxes due to the State of Connecticut from the contractor are paid to DRS. Read the instructions on the reverse side before you complete this form. If you need help, call **860-541-7538,** Monday through Friday, during business hours.

Part I: Nonresident Contractor Information

Name	Connecticut Tax Registration No.
Address (Street or PO Box, City, State, and ZIP Code)	

Part II: Person Doing Business With a Nonresident Contractor Information

Name	Connecticut Tax Registration No., Federal ID No., or SSN
Address (Street or PO Box, City, State, and ZIP Code)	

Part III: Surety Company Information

Name	Bond No.	Amount of Bond
Address (Street or PO Box, City, State, and ZIP Code)		

Part IV: Project Information ☐ Check the box if this bond is for a change order.

Physical Location of Project (Street, City or Town)		Name of Project
Commencement Date	Completion Date for Nonresident Contractor	Total Contract Price or Amount of Change Order

Conditions of the obligation for the project detailed above:

- The nonresident contractor has entered into a contract related to real property at a Connecticut location.
- The nonresident contractor and the surety company are posting a bond of 5% of the total contract price, including any change orders and add-ons, with DRS to ensure that all taxes that become due and owing during the period of the contract will be paid.
- A bond must be posted within 120 days of the commencement of the contract or 30 days after the completion of the contract, whichever is earlier.
- If the nonresident contractor pays all taxes, interest, and penalties within three years from the last day of the month succeeding the reporting period in which the contractor posted the bond, the bond expires; otherwise the obligation remains in full force.
- This bond jointly and severally binds the nonresident contractor and the surety company, their heirs, executors, administrators, successors, and assigns for payment of this obligation.

Nonresident Contractor Declaration: I, the nonresident contractor named above or its authorized agent, declare under the penalty of law that I have examined Form AU-766 and, to the best of my knowledge and belief it is true, complete, and correct. I understand the penalty for willfully delivering a false document or return to DRS is a fine of not more than $5,000, or imprisonment for not more than five years, or both.

Print Name	Title
Authorized Signature	Date

Surety Company Declaration: I, an authorized agent of the surety company named above, declare under the penalty of law that I have examined this Form AU-766 and, to the best of my knowledge and belief it is true, complete, and correct. I understand the penalty for willfully delivering a false document or return to DRS is a fine of not more than $5,000, or imprisonment for not more than five years, or both.

Seal:

Print Name	Title
Authorized Signature	Date

General Instructions

A nonresident contractor and a surety company licensed to do business in Connecticut must execute **Form AU-766**, *Guarantee Bond*, to post a guarantee bond with the Department of Revenue Services (DRS) for a specific project in Connecticut. A power of attorney for the person signing the bond on behalf of the surety company **must** be attached to the bond, carry the corporate seal of the surety company, and bear the same date as the execution date of the bond.

A nonresident contractor has the option of filing a guarantee bond or a cash bond instead of the customer making a deposit with DRS under Conn. Gen. Stat. §12-430(7)(B). Under this option, the nonresident contractor has 120 days from the commencement of the contract or 30 days after the completion of the contract, whichever is earlier, to file a guarantee bond or a cash bond (Form AU-72) with DRS.

Return Form AU-766 to: Department of Revenue Services
Discovery Unit
25 Sigourney Street
Hartford CT 06106-5032

See **Special Notice 2005(12)**, *Nonresident Contractor Bonds and Deposits*, for more information.

Nonresident contractor means a contractor who does not maintain a regular place of business in Connecticut.

Regular place of business means:

- Any bona fide office, factory, warehouse, or other space in Connecticut at which a contractor is doing business in its own name in a regular and systematic manner; **and**
- Which place is continuously maintained, occupied, and used by the contractor in carrying on its business through its employees regularly in attendance to carry on the contractor's business in the contractor's own name.

A regular place of business **does not include**:

- A place of business for a statutory agent for service of process or a temporary office whether or not it is located at the site of construction;
- Locations used by the contractor only for the duration of the contract, such as short-term leased offices, warehouses, storage facilities, or facilities that do not have full time staff with regular business hours; **or**
- An office maintained, occupied, and used by a person affiliated with a contractor.

Contract price means the total contract price, including deposits, amounts held as retainage, costs for any change orders, or charges for add-ons.

Person doing business with a nonresident contractor means **any** person who makes payments of the contract price to a nonresident contractor, and includes, but is not limited to property owners, governmental, charitable or religious entities, and resident or nonresident general contractors or subcontractors. An owner or tenant of residential real property is not a person doing business with a nonresident contractor and is not required to comply with the provisions of Conn. Gen. Stat. §12-430(7). However, the nonresident contractor doing business with such an owner or tenant must comply with the bond requirements under Conn. Gen. Stat. §12-430(7)(F).

Commencement of the contract means the time when the nonresident contractor signs the contract, but, in any event, occurs no later than when the work under the contract actually starts. If a change order is made after the commencement of the original contract, the change order commences when it is signed by the nonresident contractor, but, in any event, occurs no later than when the work under the change order actually starts.

Form AU-766(Back) (Rev. 10/05)

Completion of the contract means the time when the nonresident contractor makes the final periodic billing for the contract. The final periodic billing may be due before payment of any retainage becomes due. If a change order is made after the final periodic billing for the original contract, the change order is complete when the nonresident contractor bills for the change order.

Residential real property means real property used exclusively for residential purposes and consisting of three or fewer dwelling units in one of which the owner or tenant resides.

Any bond that bears an erasure or alteration, regardless of its nature, must have the change authenticated by a notation in the margin. The notation should describe the correction and be signed in the name of the surety company by the officer who executed the bond and must bear the corporate seal of the surety company.

Specific Instructions

Part I: Enter the name and complete address of the nonresident contractor furnishing the bond. Include the nonresident contractor's Connecticut tax registration number. The name and address of the nonresident contractor appearing on the bond must agree with the name and address on **Form REG-1**, *Business Taxes Registration Application*, filed with DRS. (If the information originally provided on Form REG-1 is now incorrect, you must notify the DRS Registration Unit in writing of the correct information.) If the nonresident contractor is a corporation, the corporate name appearing on the bond must be the same shown in the records of the Office of the Secretary of State, or similar agency of another state if the nonresident contractor is not a Connecticut corporation.

Part II: Enter the name and complete address of the person doing business with the nonresident contractor. If the nonresident contractor is the general contractor, enter the name and address of the owner or tenant of the property who has entered the contract. If the nonresident contractor is a subcontractor, enter the name and address of the general contractor.

Enter the Connecticut tax registration number of the person doing business with the nonresident contractor. If the person doing business with the nonresident contractor does not have a Connecticut tax registration number, enter that person's Federal Employer Identification Number or Social Security Number.

Part III: Enter the name and complete address of the surety company that guarantees this bond. Include the bond number.

Part IV: Check the box if the deposit is for a change order occurring after the bond for the initial contract was furnished to DRS.

Enter the name of the project and the complete address including the street address and the city or town where the project is physically located.

Enter the commencement date of this project or change order.

Enter the date by which the nonresident contractor is expected to complete work on this project or change order.

Enter, in words and figures, the total amount to be paid to the nonresident contractor under the contract. Indicate if this amount is an estimate.

Declarations: An authorized representative for the nonresident contractor and the surety company must sign and date the declaration on Form AU-766. The name of the nonresident contractor and the surety company must be exactly as it appears on the bond. The corporate seal of the surety company must be affixed by its signature on Form AU-766.

NON-COLLUSION AFFIDAVIT OF PRIME BIDDER (Include with Bid)

State of _____)
) ss.
County of _____)

_____, being first duly sworn, deposes and says that:

1. He is _____ of _____ herein referred to as the Bidder that has submitted the attached Bid;

2. He is fully informed respecting the preparation and contents of the attached Bid and of all pertinent circumstances respecting such Bid;

3. Such Bid is genuine and is not a collusive or sham bid;

4. Neither the said Bidder nor any of its officers, partners, owners, agents, representatives, employees or parties in interest, including this affidavit, has in any way colluded, conspired, connived or agreed, directly or indirectly, with any other Bidder, firm or person to submit a collusive or sham Bid in connection with the Contract for which the attached Bid has been submitted or to refrain from bidding in connection with such Contract, or has in any manner, directly or indirectly, sought by agreement or collusion or communication or conference with any other Bidder, firm or person to fix the price or prices in the attached Bid or of any other Bidder, or, to fix any overhead, profit or cost element in the bid price or the bid price of any other Bidder, or to secure through any collusion, conspiracy, connivance or unlawful agreement any advantage against the City of Derby or any person interested in the proposed Contract; and

5. The price or prices quoted in the attached Bid are fair and proper and are not tainted by any collusion, conspiracy, connivance or unlawful agreement on the part of the Bidder or any of its agents, representatives, owners, employees, or parties in interest, including this affidavit.

(Signed) _____

_____
Title

Subscribed and sworn before me

This _____day of _____, 20__

_____

_____

(Notary Public)

My Commission expires_____

NON-COLLUSION AFFIDAVIT OF SUBCONTRACTOR (Include with Bid)

State of _____)
) ss.
County of _____)

_____, being first duly sworn, deposes and says that:

1. He is _____ of _____ herein referred to as the "Subcontractor";

2. He is fully informed respecting the preparation and contents of the Subcontractor's Proposal submitted by the Subcontractor to _____, the Contractor for certain work in connection with the _____Contract pertaining to the _____Project in Derby, Connecticut;

3. Such Subcontractor's Proposal is genuine and is not a collusive or sham Proposal;

4. Neither the Subcontractor nor any of its officers, partners, owners, agents, representatives, employees or parties in interest, including this affidavit, has in any way colluded, conspired, connived or agreed, directly or indirectly, with any other Bidder, firm or person to submit a collusive or sham Proposal in connection with such Contract, or refrain from submitting a Proposal in connection with such Contract, or has in any manner, directly or indirectly, sought by unlawful agreement or connivance with any Bidder, firm or person to fix the price or prices in said Subcontractor's Proposal , or to fix any overhead, profit or cost element of the price or prices in said Subcontractor's Proposal, or to secure through any collusion, conspiracy, connivance or unlawful agreement any advantage against the City of Derby or any person interested in the proposed Contract; and

5. The price or prices quoted in the Subcontractor's Proposal are fair and proper and are not tainted by any collusion, conspiracy, connivance or unlawful agreement on the part of the Bidder or any of its agents, representatives, owners, employees, or parties in interest, including this affidavit.

6. (a) No proposed subcontractor shall be disapproved by the City of Derby except for cause.

   (b) The Contractor shall be fully responsible to the City of Derby for the acts and omissions of his subcontractors, and of persons either directly or indirectly employed by them, as he is for the acts and omissions of persons directly employed by him.

   (c) The Contractor shall cause appropriate provisions to be inserted in all subcontracts relative to the work to require compliance by each subcontractor with the applicable provisions of this Contract for:

   (d) Nothing contained in this Contract shall create any contractual relationship between any subcontractor and the City of Derby.

(Signed) _____

_____
Title

Subscribed and sworn before me

This _____day of _____, 20__

_____

_____
(Notary Public)

My commission expires_____

(e) No proposed subcontractor shall be disapproved by the City of Derby except for cause.

(f) The Contractor shall be fully responsible to the City of Derby for the acts and omissions of his subcontractors, and of persons either directly or indirectly employed by them, as he is for the acts and omissions of persons directly employed by him.

(g) The Contractor shall cause appropriate provisions to be inserted in all subcontracts relative to the work to require compliance by each subcontractor with the applicable provisions of this Contract for: O' Sullivan's Island Fishing & Viewing Platform

(h) Nothing contained in this Contract shall create any contractual relationship between any subcontractor and the City of Derby.

OTHER CONTRACTS

The City of Derby may award, or may have awarded, other Contracts for additional work, and the Contractor shall cooperate fully with such other Contractors, by scheduling his own work with that to be performed under other Contracts as may be directed by the City of Derby. The Contractor shall not commit or permit any act which will interfere with the performance of work by any other Contractor as scheduled.

FEDERAL GOVERNMENT REQUIRED CLAUSES

(BIDDERS ARE REQUESTED TO RETAIN THESE CLAUSES FOR FUTURE REFERENCE)

Fly America Requirements

All contracts involving transportation of persons or property, by air between the U.S. and / or places outside the U.S. valued at $10,000 or more, except for construction contracts over $2,000).

a) Definitions. As used in this clause—

1) "International air transportation" means transportation by air between a place in the United States and a place outside the United States or between two places both of which are outside the United States.

2) "United States" means the 50 States, the District of Columbia, and outlying areas.

3) "U.S.-flag air carrier" means an air carrier holding a certificate under 49 U.S.C. Chapter 411 and 41 C.F.R. § 301-10.131 – 10.143.

b) When Federal funds are used to fund travel, Section 5 of the International Air Transportation Fair Competitive Practices Act of 1974 (49 U.S.C. 40118) (Fly America Act) requires contractors, Agencys, and others use U.S.-flag air carriers for U.S. Government-financed international air transportation of personnel (and their personal effects) or property, to the extent that service by those carriers is available. It requires the Comptroller General of the United States, in the absence of satisfactory proof of the necessity for foreign-flag air transportation, to disallow expenditures from funds, appropriated or otherwise established for the account of the United States, for international air transportation secured aboard a foreign-flag air carrier if a U.S.-flag air carrier is available to provide such services.

c) If available, the Contractor, in performing work under this contract, shall use U.S.-flag carriers for international air transportation of personnel (and their personal effects) or property.

d) In the event that the Contractor selects a carrier other than a U.S.-flag air carrier for international air transportation, the Contractor shall include a statement on vouchers involving such transportation essentially as follows:

Statement of Unavailability of U.S.-Flag Air Carriers

International air transportation of persons (and their personal effects) or property by U.S.-flag air carrier was not available or it was necessary to use foreign-flag air carrier service for the following reasons. See FAR § 47.403. [State reasons]:

e) Contractor shall include the substance of this clause, including this paragraph (e), in each subcontract or purchase under this contract that may involve international air transportation.

Buy America Requirements

Construction Contracts and Acquisition of Goods or Rolling Stock (valued at more than $100,000)

Contractor shall comply with 49 USC 5323(j), 49 CFR 661, and 2 CFR §200.322 Domestic preferences for procurements, stating that Federal funds may not be obligated unless steel, iron, and manufactured products used in FWL-funded projects are produced in the United States, unless a waiver has been granted by Dept. of Fish & Wild Life or the product is subject to a general waiver. General waivers are listed in 49 CFR 661.7, and include software, microcomputer equipment and small purchases made with capital, operating, or planning funds. Separate requirements for rolling stock are stated at 49 U.S.C. § 5323(j), and 49 CFR 661. Rolling stock must be manufactured in the US and have a minimum 60% domestic content for FY2016 and FY2017, a minimum 65% domestic content for FY2018 and FY2019 and a minimum 70% domestic content for FY2020 and beyond. A bidder or offeror shall submit appropriate Buy America certification to the recipient with all bids on Federal-funded contracts, except those subject to a general waiver. Proposals not accompanied by a completed Buy America certification shall be rejected as nonresponsive. This requirement does not apply to lower tier subcontractors.

Cargo Preference

Use of US-Flag Vessels Contracts involving equipment, materials or commodities which may be transported by ocean vessels. (Contracts valued at $10,000 or more, except for construction contracts over $2,000).

Pursuant to the shipping requirements of 46 U.S.C. § 55305, and U.S. Maritime Administration regulations, “Cargo Preference – U.S.-Flag Vessels,” 46 CFR Part 381, the Contractor shall: a. use privately owned US-Flag commercial vessels to ship at least 50% of the gross tonnage (computed separately for dry bulk carriers, dry cargo liners, and tankers) involved, whenever shipping any equipment, material, or commodities pursuant to the underlying contract to the extent such vessels are available at fair and reasonable rates for US flag commercial vessels; b. furnish within 20 working days following the loading date of shipments originating within the US or within 30 working days following the loading date of shipments originating outside the US, a legible copy of a rated, "on-board" commercial bill-of-lading in English for each shipment of cargo described herein to the Division of National Cargo, Office of Market Development, Maritime Administration, Washington, DC 20590 and to the recipient (through contractor in the case of a subcontractor's bill-of-lading.) c. include these requirements in all subcontracts issued pursuant to this contract when the subcontract involves the transport of equipment, material, or commodities by ocean vessel.

Energy Conservation

All Contracts (valued at $10,000 or more, except for construction contracts over $2,000)

Contractor shall comply with mandatory standards and policies relating to energy efficiency, stated in the state energy conservation plan issued in compliance with the Energy Policy & Conservation Act, as amended, 42 U.S.C. § 6321, et seq., and perform an energy assessment for any building constructed, reconstructed, or modified with federal assistance required under Federal regulations, “Requirements for Energy Assessments,” 49 CFR Part 622, subpart C.

Clean Water

All Contracts and Subcontracts over $100,000.

Contractor shall comply with all applicable standards, orders or regulations issued pursuant to the Federal Water Pollution Control Act, as amended, 33 USC 1251 - 1388 et seq. Contractor shall report each violation to the recipient and understands and agrees that the recipient shall, in turn, report each violation as required to Dept. of Fish & Wildlife and the appropriate EPA Regional Office. Contractor shall include these requirements in each subcontract exceeding $100,000 financed in whole or in part with Federal assistance.

Solid Waste

The contractor must comply with section 6002 of the Solid Waste Disposal Act, as amended by the Resource Conservation and Recovery Act. The requirements of Section 6002 include procuring only items designated in guidelines of the Environmental Protection Agency (EPA) at 40 CFR Part 247 that contain the highest percentage of recovered materials practicable, consistent with maintaining a satisfactory level of competition, where the purchase price of the item exceeds $10,000 or the value of the quantity acquired during the preceding fiscal year exceeded $10,000; procuring solid waste management services in a manner that maximizes energy and resource recovery; and establishing an affirmative procurement program for procurement of recovered materials identified in the EPA guidelines.

Lobbying

Construction/Architectural and Engineering/Acquisition of Rolling Stock/Professional Service Contract/Operational Service Contract/Turnkey contracts over $100,000

Byrd Anti-Lobbying Amendment, 31 U.S.C. 1352, as amended by the Lobbying Disclosure Act of 1995, P.L. 104-65 [to be codified at 2 U.S.C. § 1601, et seq.] - Contractors who apply or bid for an award of $100,000 or more shall file the certification required by 49 CFR part 20, "New Restrictions on Lobbying." Each tier certifies to the tier above that it will not and has not used Federal appropriated funds to pay any person or organization for influencing or attempting to influence an officer or employee of any agency, a member of Congress, officer or employee of Congress, or an employee of a member of Congress in connection with obtaining any Federal contract, grant or any other award covered by 31 U.S.C. 1352. Each tier shall also disclose the name of any registrant under the Lobbying Disclosure Act of 1995 who has made lobbying contacts on its behalf with non-Federal funds with respect to that Federal contract, grant or award covered by 31 U.S.C. 1352. Such disclosures are forwarded from tier to tier up to the recipient.

Access to Records and Reports

All Contracts (valued at $10,000 or more, except for construction contracts over $2,000)

The following access to records requirements apply to this Contract:

1. In accordance with 49 CFR 18.36(i), contractor shall provide the purchaser, the Dept. of Fish & Wildlife, the US Comptroller General or their authorized representatives access to any books, documents, papers and contractor records which are pertinent to this contract for the purposes of making audits, examinations, excerpts and transcriptions. Contractor shall also, pursuant to 49 CFR 633.17, provide authorized Fish & Wildlife representatives, including any PMO contractor, access to contractor's records and construction sites pertaining to a capital project, defined at 49 USC 5302(a)1, which is receiving Fish & Wildlife assistance through the programs described at 49 USC 5307, 5309 or 5311.

2. In accordance with 49 CFR 633.17, contractor shall provide the purchaser, authorized Fish & Wildlife representatives, including any PMO Contractor, access to contractor's records and construction sites pertaining to a capital project, defined at 49 USC 5302(a)1, which receives Fish & Wildlife assistance through the programs described at 49 USC 5307, 5309 or 5311. By definition, a capital project excludes contracts of less than the simplified acquisition threshold currently set at $100,000.

3. Where the negotiated contract for other than a small purchase or under the simplified acquisition threshold, in accordance with 49 CFR 19.48, contractor shall provide the purchaser, the Fish & Wildlife, the US Comptroller General or their authorized representatives, access to any books, documents, papers and record of the contractor which are directly pertinent to this contract for the purposes of making audits, examinations, excerpts and transcriptions.

4. In accordance with 49 USC 5325(a) for contracts of a capital project or improvement (defined at 49 USC 5302(a)1) through other than competitive bidding, contractor shall make available records related to the contract to the purchaser, the Secretary of USDOI and the US Comptroller General or any authorized officer or employee of any of them for the purposes of conducting an audit and inspection.

5. Contractor shall permit any of the foregoing parties to reproduce by any means whatsoever or to copy excerpts and transcriptions as reasonably needed.

6. Contractor shall maintain all books, records, accounts and reports required under this contract for a period of not less than three (3) years after the date of termination or expiration of this contract, except in the event of litigation or settlement of claims arising from the performance of this contract, in which case contractor agrees to maintain same until the recipient, Fish & Wildlife Administrator, US Comptroller General, or any of their authorized representatives, have disposed of all such litigation, appeals, claims or exceptions related thereto. Re: 49 CFR 18.39(i)(11).

7. Contactor shall otherwise comply with 49 U.S.C. § 5325(g), and federal access to records requirements as set forth in the applicable U.S. DOI Common Rules.

FWL does not require the inclusion of these requirements in subcontracts.

Federal Changes

All Contracts (valued at $10,000 or more, except for construction contracts over $2,000)

Pursuant to 49 CFR Part 18, contractor shall comply with all applicable Fish & Wildlife regulations, policies, procedures and directives, including without limitation those listed directly or by reference in the Master Agreement between the recipient and Fish & Wildlife, as they may be amended or promulgated from time to time during the term of the contract. Contractor's failure to comply shall constitute a material breach of the contract.

Bonding Requirements

For those construction or facility improvement contracts or subcontracts exceeding $100,000, FWL may accept the bonding policy and requirements of the recipient, provided that they meet the minimum requirements for construction contracts as follows:

Bid Guarantee. Bidders shall furnish a bid guaranty in the form of a bid bond, or certified treasurer’s or cashier’s check issued by a responsible bank or trust company, made payable to the Agency. The amount of such guaranty shall be equal to the value or a percentage of the total bid price.

In submitting this bid, it is understood and agreed by bidder that the Agency reserves the right to reject any and all bids, or part of any bid, and it is agreed that the Bid may not be withdrawn for a period of [90] days subsequent to the

opening of bids, without the written consent of Agency.

It is also understood and agreed that if the undersigned bidder should withdraw any part or all of their bid within [90] days after the bid opening without the written consent of the Agency, or refuse or be unable to enter into this Contract as provided above, or refuse or be unable to furnish adequate and acceptable Performance and Payment Bonds, or refuse or be unable to furnish adequate and acceptable insurance, as provided above, it shall forfeit its bid guaranty to the extent Agency's damages occasioned by such withdrawal, or refusal, or inability to enter into a Contract, or provide adequate security thereof.

It is further understood and agreed that to the extent the defaulting bidder's bid guaranty shall prove inadequate tofully recompense Agency for the damages occasioned by default, then the undersigned bidder agrees to indemnify Agency and pay over to Agency the difference between the bid guarantee and Agency's total damages so as to make Agency whole.

The undersigned understands that any material alteration of any of the above or any of the material contained herein, other than that requested will render the bid unresponsive.

Performance Guarantee. A Performance Guarantee in the amount of 100% of the Contract value is required by the Agency to ensure faithful performance of the Contract. Either a Performance Bond or an Irrevocable Stand-By Letter of Credit shall be provided by the Contractor and shall remain in full force for the term of the Contract. The successful Bidder shall certify that it will provide the requisite Performance Guarantee to the Agency within ten (10) business days from Contract execution. The Agency requires all Performance Bonds to be provided by a fully qualified surety company acceptable to the Agency and listed as a company currently authorized under 31 C.F.R. part 22 as possessing a Certificate of Authority as described hereunder. Agency may require additional performance bond protection when the contract price is increased. The increase in protection shall generally equal 100 percent of the increase in contract price. The Agency may secure additional protection by directing the Contractor to increase the amount of the existing bond or to obtain an additional bond.

If the Bidder chooses to provide a Letter of Credit as its Performance Guarantee, the Bidder shall furnish with its bid, certification that an Irrevocable Stand-By Letter of Credit will be furnished should the Bidder become the successful Contractor. The Bidder shall also provide a statement from the banking institution certifying that an Irrevocable Stand-By Letter of Credit for the action will be provided if the Contract is awarded to the Bidder. The Irrevocable Stand- By Letter of Credit will only be accepted by the Agency if:

1. A bank in good standing issues it. The Agency will not accept a Letter of Credit from an entity other than a bank.
2. It is in writing and signed by the issuing bank.
3. It conspicuously states that it is an irrevocable, non-transferable, "standby" Letter of Credit.
4. The Agency is identified as the Beneficiary.
5. It is in an amount equal to 100% of the Contract value. This amount must be in U.S. dollars.
6. The effective date of the Letter of Credit is the same as the effective date of the Contract
7. The expiration date of the Letter of Credit coincides with the term of the contract.
8. It indicates that it is being issued in order to support the obligation of the Contractor to perform under the Contract. It must specifically reference the Contract between the Agency and the Contractor the work stipulated herein.

The issuing bank's obligation to pay will arise upon the presentation of the original Letter of Credit and a certificate and draft to the issuing bank's representative at a location and time to be determined by the parties. This documentation will indicate that the Contractor is in default under the Contract.

Payment Bonds. A Labor and Materials Payment Bond equal to the full value of the contract must be furnished by the contractor to Agency as security for payment by the Contractor and subcontractors for labor, materials, and rental of equipment. The bond may be issued by a fully qualified surety company acceptable to (Agency) and listed as a company currently authorized under 31 C.F.R. part 223 as possessing a Certificate of Authority as described thereunder.

Clean Air

All contracts over $100,000.

(1) Contractor shall comply with all applicable standards, orders or regulations pursuant to the Clean Air Act, 42 USC 7401-7671(q) et seq. Contractor shall report each violation to the recipient and understands and agrees that the recipient will, in turn, report each violation as required to Dept. of Fish & Wildlife and the appropriate EPA Regional Office.

(2) Contractor shall include these requirements in each subcontract exceeding $100,000 financed in whole or in part with Fish & Wildlife assistance.

Recycled Products

All contracts for items designated by the EPA, when the purchaser or contractor procures $10,000 or more of one of these items during the current or previous fiscal year using Federal funds.

The contractor agrees to comply with all the requirements of Section 6002 of the Resource Conservation and Recovery Act (RCRA), as amended (42 U.S.C. 6962), including but not limited to the regulatory provisions of 40 CFR Part 247, and Executive Order 12873, as they apply to the procurement of the items designated in Subpart B of 40 CFR Part 247.

Davis-Bacon and Copeland Anti-Kickback Acts

Construction contracts and subcontracts, including actual construction, alteration and/or repair, including decorating and painting, over $2,000

Contractor shall comply with Prevaling Wage Requirements of:

(i) Federal laws, specifically 49 U.S.C. § 5333(a), ("Davis-Bacon Related Act");

(ii) The Davis-Bacon Act, 40 U.S.C. §§ 3141 – 3144, 3146, and 3147; and

(iii) (iii) U.S. DOL regulations, "Labor Standards Provisions Applicable to Contracts Covering Federally Financed and Assisted Construction (also Labor Standards Provisions Applicable to Nonconstruction Contracts Subject to the Contract Work Hours and Safety Standards Act)," 29 CFR Part 5.

Contractor shall comply with Wage and Hour Requirements of:

(i) Section 102 of the Contract Work Hours and Safety Standards Act, as amended, 40 U.S.C. § 3702, and other relevant parts of that Act, 40 U.S.C. § 3701, et seq.; and

(ii) U.S. DOL regulations, "Labor Standards Provisions Applicable to Contracts Covering Federally Financed and Assisted Construction (also Labor Standards Provisions Applicable to Nonconstruction Contracts Subject to the Contract Work Hours and Safety Standards Act)," 29 CFR Part 5.

(1) Minimum wages –

(i) All laborers and mechanics employed or working upon the site of the work (or under the United States Housing Act of 1937 or under the Housing Act of 1949 in the construction or development of the project), will be paid unconditionally and not less often than once a week, and without subsequent deduction or rebate on any account (except such payroll deductions as are permitted by regulations issued by the Secretary of Labor under the Copeland Act (29 CFR part 3)), the full amount of wages and bona fide fringe benefits (or cash equivalents thereof) due at time of payment computed at rates not less than those contained in the wage determination of the Secretary of Labor which is attached hereto and made a part hereof, regardless of any contractual relationship which may be alleged to exist between the contractor and such laborers and mechanics. Contributions made or costs reasonably anticipated for bona fide fringe benefits under section 1(b)(2) of the Davis-Bacon Act on behalf of laborers or mechanics are considered wages paid to such laborers or mechanics, subject to the provisions of paragraph (1)(iv) of this section; also, regular contributions made or costs incurred for more than a weekly period (but not less often than quarterly) under plans, funds, or programs which cover the particular weekly period, are deemed to be constructively made or incurred during such weekly period. Such laborers and mechanics shall be paid the appropriate wage rate and fringe benefits on the wage determination for the classification of work actually performed, without regard to skill, except as provided in 29 CFR Part 5.5(a)(4). Laborers or mechanics performing work in more than one classification may be compensated at the rate specified for each classification for the time actually worked therein: Provided, That the employer's payroll records accurately set forth the time spent in each classification in which work is performed. The wage determination (including any additional classifications and wage rates conformed under paragraph (1)(ii) of this section) and the

Davis-Bacon poster (WH-1321) shall be posted at all times by the contractor and its subcontractors at the site of the work in a prominent and accessible place where it can be easily seen by the workers.

(ii)The contracting officer shall require that any class of laborers or mechanics, including helpers, which is not listed in the wage determination and which is to be employed under the contract shall be classified in conformance with the wage determination. The contracting officer shall approve an additional classification and wage rate and fringe benefits therefore only when the following criteria have been met:

(1)Except with respect to helpers as defined as 29 CFR 5.2(n)(4), the work to be performed by the classification requested is not performed by a classification in the wage determination; and

(2)The classification is utilized in the area by the construction industry; and

(3)The proposed wage rate, including any bona fide fringe benefits, bears a reasonable relationship to the wage rates contained in the wage determination; and

(4)With respect to helpers as defined in 29 CFR 5.2(n)(4), such a classification prevails in the area in which the work is performed.

(iii) If the contractor and the laborers and mechanics to be employed in the classification (if known), or their representatives, and the contracting officer agree on the classification and wage rate (including the amount designated for fringe benefits where appropriate), a report of the action taken shall be sent by the contracting officer to the Administrator of the Wage and Hour Division, Employment Standards Administration, U.S. Department of Labor, Washington, DC 20210. The Administrator, or an authorized representative, will approve, modify, or disapprove every additional classification action within 30 days of receipt and so advise the contracting officer or will notify the contracting officer within the 30-day period that additional time is necessary.

(i) In the event the contractor, the laborers or mechanics to be employed in the classification or their representatives, and the contracting officer do not agree on the proposed classification and wage rate (including the amount designated for fringe benefits, where appropriate), the contracting officer shall refer the questions, including the views of all interested parties and the recommendation of the contracting officer, to the Administrator for determination. The Administrator, or an authorized representative, will issue a determination within 30 days of receipt and so advise the contracting officer or will notify the contracting officer within the 30-day period that additional time is necessary.

(ii) The wage rate (including fringe benefits where appropriate) determined pursuant to paragraphs (a)(1)(ii) (B) or (C) of this section, shall be paid to all workers performing work in the classification under this contract from the first day on which work is performed in the classification.(iii) Whenever the minimum wage rate prescribed in the contract for a class of laborers or mechanics includes a fringe benefit which is not expressed as an hourly rate, the contractor shall either pay the benefit as stated in the wage determination or shall pay another bona fide fringe benefit or an hourly cash equivalent thereof.

(iii)If the contractor does not make payments to a trustee or other third person, the contractor may consider as part of the wages of any laborer or mechanic the amount of any costs reasonably anticipated in providing bona fide fringe benefits under a plan or program, Provided, That the Secretary of Labor has found, upon the written request of the contractor, that the applicable standards of the Davis-Bacon Act have been met. The Secretary of Labor may require the contractor to set aside in a separate account assets for the meeting of obligations under the plan or program.

(A) The contracting officer shall require that any class of laborers or mechanics which is not listed in the wage determination and which is to be employed under the contract shall be classified in conformance with the wage determination. The contracting officer shall approve an additional classification and wage rate and fringe benefits therefor only when the following criteria have been met:

(1) The work to be performed by the classification requested is not performed by a classification in the wage determination; and

(2) The classification is utilized in the area by the construction industry; and

(3) The proposed wage rate, including any bona fide fringe benefits, bears a reasonable relationship to the wage rates contained in the wage determination.

(B) If the contractor and the laborers and mechanics to be employed in the classification (if known), or their representatives, and the contracting officer agree on the classification and wage rate (including the amount designated for fringe benefits where appropriate), a report of the action taken shall be sent by the contracting officer to the Administrator of the Wage and Hour Division, Employment Standards Administration, Washington, DC 20210. The Administrator, or an authorized representative, will approve, modify, or disapprove every additional classification action within 30 days of receipt and so advise the contracting officer or will notify the contracting officer within the 30-day period that additional time is necessary.

(C) In the event the contractor, the laborers or mechanics to be employed in the classification or their representatives, and

the contracting officer do not agree on the proposed classification and wage rate (including the amount designated for fringe benefits, where appropriate), the contracting officer shall refer the questions, including the views of all interested parties and the recommendation of the contracting officer, to the Administrator for determination. The Administrator, or an authorized representative, will issue a determination with 30 days of receipt and so advise the contracting officer or will notify the contracting officer within the 30-day period that additional time is necessary.

(D) The wage rate (including fringe benefits where appropriate) determined pursuant to paragraphs (a)(1)(v) (B) or (C) of this section, shall be paid to all workers performing work in the classification under this contract from the first day on which work is performed in the classification.

(2) Withholding - The recipient shall upon its own action or upon written request of an authorized representative of the Department of Labor withhold or cause to be withheld from the contractor under this contract or any other Federal contract with the same prime contractor, or any other federally-assisted contract subject to Davis-Bacon prevailing wage requirements, which is held by the same prime contractor, so much of the accrued payments or advances as may be considered necessary to pay laborers and mechanics, including apprentices, trainees, and helpers, employed by the contractor or any subcontractor the full amount of wages required by the contract. In the event of failure to pay any laborer or mechanic, including any apprentice, trainee, or helper, employed or working on the site of the work (or under the United States Housing Act of 1937 or under the Housing Act of 1949 in the construction or development of the project), all or part of the wages required by the contract, the grantee may, after written notice to the contractor, sponsor, applicant, or owner, take such action as may be necessary to cause the suspension of any further payment, advance, or guarantee of funds until such violations have ceased.

(3) Payrolls and basic records –

(A) Payrolls and basic records relating thereto shall be maintained by the contractor during the course of the work and preserved for a period of three years thereafter for all laborers and mechanics working at the site of the work (or under the United States Housing Act of 1937, or under the Housing Act of 1949, in the construction or development of the project). Such records shall contain the name, address, and social security number of each such worker, his or her correct classification, hourly rates of wages paid (including rates of contributions or costs anticipated for bona fide fringe benefits or cash equivalents thereof of the types described in section 1(b)(2)(B) of the Davis-Bacon Act), daily and weekly number of hours worked, deductions made and actual wages paid. Whenever the Secretary of Labor has found under 29 CFR 5.5(a)(1)(iv) that the wages of any laborer or mechanic include the amount of any costs reasonably anticipated in providing benefits under a plan or program described in section 1(b)(2)(B) of the Davis-Bacon Act, the contractor shall maintain records which show that the commitment to provide such benefits is enforceable, that the plan or program is financially responsible, and that the plan or program has been communicated in writing to the laborers or mechanics affected, and records which show the costs anticipated or the actual cost incurred in providing such benefits. Contractors employing apprentices or trainees under approved programs shall maintain written evidence of the registration of apprenticeship programs and certification of trainee programs, the registration of the apprentices and trainees, and the ratios and wage rates prescribed in the applicable programs.

(B) The contractor shall submit weekly for each week in which any contract work is performed a copy of all payrolls to the recipient for transmission to the Federal Transit Administration. The payrolls submitted shall set out accurately and completely all of the information required to be maintained under section 5.5(a)(3)(i) of Regulations, 29 CFR part 5.

This information may be submitted in any form desired. Optional Form WH-347 is available for this purpose and may be purchased from the Superintendent of Documents (Federal Stock Number 029-005-00014-1), U.S. Government Printing Office, Washington, DC 20402. The prime contractor is responsible for the submission of copies of payrolls by all subcontractors.

(C) Each payroll submitted shall be accompanied by a "Statement of Compliance," signed by the contractor or subcontractor or his or her agent who pays or supervises the payment of the persons employed under the contract and shall certify the following:

(1) That the payroll for the payroll period contains the information required to be maintained under section 5.5(a)(3)(i) of Regulations, 29 CFR part 5 and that such information is correct and complete;

(2) That each laborer or mechanic (including each helper, apprentice, and trainee) employed on the contract during the payroll period has been paid the full weekly wages earned, without rebate, either directly or indirectly, and that no deductions have been made either directly or indirectly from the full wages earned, other than permissible deductions as set forth in Regulations, 29 CFR part 3;

(3) That each laborer or mechanic has been paid not less than the applicable wage rates and fringe

benefits or cash equivalents for the classification of work performed, as specified in the applicable wage determination incorporated into the contract.

(D) The weekly submission of a properly executed certification set forth on the reverse side of Optional Form WH-347 shall satisfy the requirement for submission of the "Statement of Compliance" required by paragraph (a)(3)(ii)(B) of this section.

(E) The falsification of any of the above certifications may subject the contractor or subcontractor to civil or criminal prosecution under section 1001 of title 18 and section 231 of title 31 of the United States Code.

(i) The contractor or subcontractor shall make the records required under paragraph (a)(3)(i) of this section available for inspection, copying, or transcription by authorized representatives of the Federal Transit Administration or the Department of Labor, and shall permit such representatives to interview employees during working hours on the job. If the contractor or subcontractor fails to submit the required records or to make them available, the Federal agency may, after written notice to the contractor, sponsor, applicant, or owner, take such action as may be necessary to cause the suspension of any further payment, advance, or guarantee of funds. Furthermore, failure to submit the required records upon request or to make such records available may be grounds for debarment action pursuant to 29 CFR 5.12.

(4) Apprentices and trainees –

(i) Apprentices - Apprentices will be permitted to work at less than the predetermined rate for the work they performed when they are employed pursuant to and individually registered in a bona fide apprenticeship program registered with the U.S. Department of Labor, Employment and Training Administration, Bureau of Apprenticeship and Training, or with a State Apprenticeship Agency recognized by the Bureau, or if a person is employed in his or her first 90 days of probationary employment as an apprentice in such an apprenticeship program, who is not individually registered in the program, but who has been certified by the Bureau of Apprenticeship and Training or a State Apprenticeship Agency (where appropriate) to be eligible for probationary employment as an apprentice. The allowable ratio of apprentices to journeymen on the job site in any craft classification shall not be greater than the ratio permitted to the contractor as to the entire work force under the registered program. Any worker listed on a payroll at an apprentice wage rate, who is not registered or otherwise employed as stated above, shall be paid not less than the applicable wage rate on the wage determination for the classification of work actually performed. In addition, any apprentice performing work on the job site in excess of the ratio permitted under the registered program shall be paid not less than the applicable wage rate on the wage determination for the work actually performed. Where a contractor is performing construction on a project in a locality other than that in which its program is registered, the ratios and wage rates (expressed in percentages of the journeyman's hourly rate) specified in the contractor's or subcontractor's registered program shall be observed. Every apprentice must be paid at not less than the rate specified in the registered program for the apprentice's level of progress, expressed as a percentage of the journeymen hourly rate specified in the applicable wage determination. Apprentices shall be paid fringe benefits in accordance with the provisions of the apprenticeship program. If the apprenticeship program does not specify fringe benefits, apprentices must be paid the full amount of fringe benefits listed on the wage determination for the applicable classification. If the Administrator of the Wage and Hour Division of the U.S. Department of Labor determines that a different practice prevails for the applicable apprentice classification, fringes shall be paid in accordance with that determination. In the event the Bureau of Apprenticeship and Training, or a State Apprenticeship Agency recognized by the Bureau, withdraws approval of an apprenticeship program, the contractor will no longer be permitted to utilize apprentices at less than the applicable predetermined rate for the work performed until an acceptable program is approved.

(ii) Trainees - Except as provided in 29 CFR 5.16, trainees will not be permitted to work at less than the predetermined rate for the work performed unless they are employed pursuant to and individually registered in a program which has received prior approval, evidenced by formal certification by the U.S. Department of Labor, Employment and Training Administration. The ratio of trainees to journeymen on the job site shall not be greater than permitted under the plan approved by the Employment and Training Administration. Every trainee must be paid at not less than the rate specified in the approved program for the trainee's level of progress, expressed as a percentage of the journeyman hourly rate specified in the applicable wage determination. Trainees shall be paid fringe benefits in accordance with the provisions of the trainee program. If the trainee program does not mention fringe benefits, trainees shall be paid the full amount of fringe benefits listed on the wage determination unless the Administrator of the Wage and Hour Division determines that there is an apprenticeship program associated with the corresponding journeyman wage rate on the wage determination which provides for less than full fringe benefits for apprentices. Any employee listed on the payroll at a trainee rate who is not registered and participating in a training plan approved by the Employment and Training Administration shall be paid not less than the applicable wage rate on the wage determination for the classification of work actually performed. In addition, any trainee performing work on the job site in excess of the ratio permitted under the registered program shall be paid not less than the applicable wage rate on the wage determination for the work actually performed. In the event the Employment and Training Administration withdraws approval of a training program, the contractor will no longer be permitted to utilize trainees at less than the applicable predetermined rate for the work performed until an acceptable program is approved.

(iii) Equal employment opportunity - The utilization of apprentices, trainees and journeymen under this part shall be in conformity with the equal employment opportunity requirements of Executive Order 11246, as amended, and 29 CFR part 30.

(5) Compliance with Copeland Act requirements - The contractor shall comply with the requirements of 29 CFR part 3, 18 U.S.C. § 874, and 40 U.S.C. § 3145, which are incorporated by reference in this contract.

(6) Subcontracts - The contractor or subcontractor shall insert in any subcontracts the clauses contained in 29 CFR 5.5(a)(1) through (10) and such other clauses as the Federal Transit Administration may by appropriate instructions require, and also a clause requiring the subcontractors to include these clauses in any lower tier subcontracts. The prime contractor shall be responsible for the compliance by any subcontractor or lower tier subcontractor with all the contract clauses in 29 CFR 5.5.

(7) Contract termination: debarment - A breach of the contract clauses in 29 CFR 5.5 may be grounds for termination of the contract, and for debarment as a contractor and a subcontractor as provided in 29 CFR 5.12.

(8) Compliance with Davis-Bacon and Related Act requirements - All rulings and interpretations of the Davis-Bacon and Related Acts contained in 29 CFR parts 1, 3, and 5 are herein incorporated by reference in this contract.

(9) Disputes concerning labor standards - Disputes arising out of the labor standards provisions of this contract shall not be subject to the general disputes clause of this contract. Such disputes shall be resolved in accordance with the procedures of the Department of Labor set forth in 29 CFR parts 5, 6, and 7. Disputes within the meaning of this clause include disputes between the contractor (or any of its subcontractors) and the contracting agency, the U.S. Department of Labor, or the employees or their representatives.

(10) Certification of Eligibility

(i) By entering into this contract, contractor certifies that neither it (nor he or she) nor any person or firm who has an interest in contractor's firm is a person or firm ineligible to be awarded Government contracts by virtue of section 3(a) of the Davis-Bacon Act or 29 CFR 5.12(a)(1).

(ii) No part of this contract shall be subcontracted to any person or firm ineligible for award of a Government contract by virtue of section 3(a) of the Davis-Bacon Act or 29 CFR 5.12(a)(1).

(iii) The penalty for making false statements is prescribed in 18 USC 1001.

Contract Work Hours & Safety Standards Act

Contracts over $100,000

A. Where applicable (see 40 U.S.C. § 3701 – 3708), all contracts that involve the employment of mechanics or laborers must include a provision for compliance with 40 U.S.C. §§ 3702 and 3704, as supplemented by Department of Labor regulations at 29 C.F.R. Part 5. See 2 C.F.R. Part 200, Appendix II.

B. Under 40 U.S.C. § 3702, each contractor must be required to compute the wages of every mechanic and laborer on the basis of a standard work week of 40 hours. Work in excess of the standard work week is permissible provided that the worker is compensated at a rate of not less than one and a half times the basic rate of pay for all hours worked in excess of 40 hours in the work week.

C. The requirements of 40 U.S.C. § 3704 are applicable to construction work and provide that no laborer or mechanic must be required to work in surroundings or under working conditions which are unsanitary, hazardous or dangerous. These requirements do not apply to the purchases of supplies or materials or articles ordinarily available on the open market, or contracts for transportation or transmission of intelligence.

D. The regulation at 29 C.F.R. § 5.5(b) provides the required contract clause concerning compliance with the Contract Work Hours and Safety Standards Act:

(1) Overtime requirements - No contractor or subcontractor contracting for any part of the contract work which may require or involve the employment of laborers or mechanics shall require or permit any such laborer or mechanic in any workweek in which he or she is employed on such work to work in excess of 40 hours in such workweek unless such laborer or mechanic receives compensation at a rate not less than one and one-half times the basic rate of pay for all hours worked in excess of 40 hours in such workweek.

(2) Violation; liability for unpaid wages; liquidated damages - In the event of any violation of the clause set forth in paragraph 1 of this section, contractor and any subcontractor responsible therefore shall be liable for the unpaid wages. In addition, such contractor and subcontractor shall be liable for liquidated damages. Such liquidated damages shall be computed with respect to each individual laborer or mechanic, including watchmen and guards, employed in violation of the clause set forth in paragraph 1 of this section, in the sum of $10 for each calendar day on which such individual was required or permitted to work in excess of the standard workweek of 40 hours without payment of the overtime

wages required by the clause set forth in paragraph 1 of this section.

(3) Withholding for unpaid wages and liquidated damages - the recipient shall upon its own action or upon written request of USDOL withhold or cause to be withheld, from any moneys payable on account of work performed by contractor or subcontractor under any such contract or any other Federal contract with the same prime contractor, or any other federally-assisted contract subject to the Contract Work Hours & Safety Standards Act, which is held by the same prime contractor, such sums as may be determined to be necessary to satisfy any liabilities of such contractor or subcontractor for unpaid wages and liquidated damages as provided in the clause set forth in paragraph 2 of this section.

(4) Subcontracts - Contractor or subcontractor shall insert in any subcontracts the clauses set forth in this section and also a clause requiring the subcontractors to include these clauses in any lower tier subcontracts. Prime contractor shall be responsible for compliance by any subcontractor or lower tier subcontractor with the clauses set forth in this section.

No Government Obligation to Third Parties

All contracts (valued at $10,000 or more, except for construction contracts over $2,000)

(1) The recipient and contractor acknowledge and agree that, notwithstanding any concurrence by the US Government in or approval of the solicitation or award of the underlying contract, absent the express written consent by the US Government, the US Government is not a party to this contract and shall not be subject to any obligations or liabilities to the recipient, the contractor, or any other party (whether or not a party to that contract) pertaining to any matter resulting from the underlying contract.

(2) Contractor agrees to include the above clause in each subcontract financed in whole or in part with Federal assistance. It is further agreed that the clause shall not be modified, except to identify the subcontractor who will be subject to its provisions.

Program Fraud and False or Fraudulent Statements or Related Acts

All contracts (valued at $10,000 or more, except for construction contracts over $2,000)

(1) Contractor acknowledges that the provisions of the Program Fraud Civil Remedies Act of 1986, as amended, 31 USC 3801 et seq. and USDOT regulations, "Program Fraud Civil Remedies," 49 CFR 31, apply to its actions pertaining to this project. Upon execution of the underlying contract, contractor certifies or affirms the truthfulness and accuracy of any statement it has made, it makes, it may make, or causes to be made, pertaining to the underlying contract or Federally assisted project for which this contract work is being performed. In addition to other penalties that may be applicable, contractor further acknowledges that if it makes, or causes to be made, a false, fictitious, or fraudulent claim, statement, submittal, or certification, the US Government reserves the right to impose the penalties of the Program Fraud Civil Remedies Act (1986) on contractor to the extent the US Government deems appropriate.

(2) If contractor makes, or causes to be made, a false, fictitious, or fraudulent claim, statement, submittal, or certification to the US Government under a contract connected with a project that is financed in whole or in part with Federal assistance under the authority of 49 USC 5307, the Government reserves the right to impose the penalties of 18 USC 1001 and 49 USC 5307(n)(1) on contractor, to the extent the US Government deems appropriate.

(3) Contractor shall include the above two clauses in each subcontract financed in whole or in part with Federal assistance. The clauses shall not be modified, except to identify the subcontractor who will be subject to the provisions.

Termination

All Contracts over $10,000, except contracts with nonprofit organizations and institutions of higher learning, where the threshold is $100,000

a. Termination for Convenience (General Provision) the recipient may terminate this contract, in whole or in part, at any time by written notice to contractor when it is in the recipient's best interest. Contractor shall be paid its costs, including contract close-out costs, and profit on work performed up to the time of termination. Contractor shall promptly submit its termination claim to the recipient. If contractor is in possession of any of the recipient's property, contractor shall account for same, and dispose of it as the recipient directs.

b. Termination for Default [Breach or Cause] (General Provision) If contractor does not deliver items in accordance with the contract delivery schedule, or, if the contract is for services, and contractor fails to perform in the manner called for in the contract, or if contractor fails to comply with any other provisions of the contract, the recipient may terminate this contract for default. Termination shall be effected by serving a notice of termination to contractor setting forth the manner in which contractor is in default. Contractor shall only be paid the contract price for supplies

delivered and accepted, or for services performed in accordance with the manner of performance set forth in the contract.

If it is later determined by the recipient that contractor had an excusable reason for not performing, such as a strike, fire, or flood, events which are not the fault of or are beyond the control of contractor, the recipient, after setting up a new delivery or performance schedule, may allow contractor to continue work, or treat the termination as a termination for convenience.

c. Opportunity to Cure (General Provision) the recipient in its sole discretion may, in the case of a termination for breach or default, allow contractor an appropriately short period of time in which to cure the defect. In such case, the notice of termination shall state the time period in which cure is permitted and other appropriate conditions.

If contractor fails to remedy to the recipient's satisfaction the breach or default or any of the terms, covenants, or conditions of this Contract within ten (10) days after receipt by contractor or written notice from the recipient setting forth the nature of said breach or default, the recipient shall have the right to terminate the Contract without any further obligation to contractor. Any such termination for default shall not in any way operate to preclude the recipient from also pursuing all available remedies against contractor and its sureties for said breach or default.

d. Waiver of Remedies for any Breach In the event that the recipient elects to waive its remedies for any breach by contractor of any covenant, term or condition of this Contract, such waiver by the recipient shall not limit its remedies for any succeeding breach of that or of any other term, covenant, or condition of this Contract.

e. Termination for Convenience (Professional or Transit Service Contracts) the recipient, by written notice, may terminate this contract, in whole or in part, when it is in the recipient's interest. If the contract is terminated, the recipient shall be liable only for payment under the payment provisions of this contract for services rendered before the effective date of termination.

f. Termination for Default (Supplies and Service) If contractor fails to deliver supplies or to perform the services within the time specified in this contract or any extension or if the contractor fails to comply with any other provisions of this contract, the recipient may terminate this contract for default. The recipient shall terminate by delivering to contractor a notice of termination specifying the nature of default. Contractor shall only be paid the contract price for supplies delivered and accepted, or services performed in accordance with the manner or performance set forth in this contract.

If, after termination for failure to fulfill contract obligations, it is determined that contractor was not in default, the rights and obligations of the parties shall be the same as if termination had been issued for the recipient's convenience.

g. Termination for Default (Transportation Services) If contractor fails to pick up the commodities or to perform the services, including delivery services, within the time specified in this contract or any extension or if contractor fails to comply with any other provisions of this contract, the recipient may terminate this contract for default. The recipient shall terminate by delivering to contractor a notice of termination specifying the nature of default. Contractor shall only be paid the contract price for services performed in accordance with the manner of performance set forth in this contract.

If this contract is terminated while contractor has possession of the recipient goods, contractor shall, as directed by the recipient, protect and preserve the goods until surrendered to the recipient or its agent. Contractor and the recipient shall agree on payment for the preservation and protection of goods. Failure to agree on an amount shall be resolved under the Dispute clause. If, after termination for failure to fulfill contract obligations, it is determined that contractor was not in default, the rights and obligations of the parties shall be the same as if termination had been issued for the recipient's convenience.

h. Termination for Default (Construction) If contractor refuses or fails to prosecute the work or any separable part, with the diligence that will insure its completion within the time specified, or any extension, or fails to complete the work within this time, or if contractor fails to comply with any other provisions of this contract, the recipient may terminate this contract for default. the recipient shall terminate by delivering to contractor a notice of termination specifying the nature of default. In this event, the recipient may take over the work and compete it by contract or otherwise, and may take possession of and use any materials, appliances, and plant on the work site necessary for completing the work. Contractor and its sureties shall be liable for any damage to the recipient resulting from contractor's refusal or failure to complete the work within specified time, whether or not contractor's right to proceed with the work is terminated. This liability includes any increased costs incurred by the recipient in completing the work.

Contractor's right to proceed shall not be terminated nor shall contractor be charged with damages under this clause if:

i. Delay in completing the work arises from unforeseeable causes beyond the control and without the fault or negligence of contractor. Examples of such causes include: acts of God, acts of the recipient, acts of another

contractor in the performance of a contract with the recipient, epidemics, quarantine restrictions, strikes, freight embargoes; and

ii. Contractor, within 10 days from the beginning of any delay, notifies the recipient in writing of the causes of delay. If in the recipient's judgment, delay is excusable, the time for completing the work shall be extended. The recipient's judgment shall be final and conclusive on the parties, but subject to appeal under the Disputes clauses.

If, after termination of contractor's right to proceed, it is determined that contractor was not in default, or that the delay was excusable, the rights and obligations of the parties will be the same as if termination had been issued for the recipient's convenience.

iii. Termination for Convenience or Default (Architect & Engineering) the recipient may terminate this contract in whole or in part, for the recipient's convenience or because of contractor's failure to fulfill contract obligations. The recipient shall terminate by delivering to contractor a notice of termination specifying the nature, extent, and effective date of termination. Upon receipt of the notice, contractor shall

(1) immediately discontinue all services affected (unless the notice directs otherwise), and

(2) deliver to the recipient all data, drawings, specifications, reports, estimates, summaries, and other information and materials accumulated in performing this contract, whether completed or in process. If termination is for the recipient's convenience, it shall make an equitable adjustment in the contract price but shall allow no anticipated profit on unperformed services. If termination is for contractor's failure to fulfill contract obligations, the recipient may complete the work by contact or otherwise and contractor shall be liable for any additional cost incurred by the recipient.

If, after termination for failure to fulfill contract obligations, it is determined that contractor was not in default, the rights and obligations of the parties shall be the same as if termination had been issued for the recipient's convenience.

j. Termination for Convenience or Default (Cost-Type Contracts) the recipient may terminate this contract, or any portion of it, by serving a notice or termination on contractor. The notice shall state whether termination is for convenience of the recipient or for default of contractor. If termination is for default, the notice shall state the manner in which contractor has failed to perform the requirements of the contract. Contractor shall account for any property in its possession paid for from funds received from the recipient, or property supplied to contractor by the recipient. If termination is for default, the recipient may fix the fee, if the contract provides for a fee, to be paid to contractor in proportion to the value, if any, of work performed up to the time of termination. Contractor shall promptly submit its termination claim to the recipient and the parties shall negotiate the termination settlement to be paid to contractor. If termination is for the recipient's convenience, contractor shall be paid its contract close-out costs, and a fee, if the contract provided for payment of a fee, in proportion to the work performed up to the time of termination.

If, after serving a notice of termination for default, the recipient determines that contractor has an excusable reason for not performing, such as strike, fire, flood, events which are not the fault of and are beyond the control of contractor, the recipient, after setting up a new work schedule, may allow contractor to continue work, or treat the termination as a termination for convenience.

Government-wide Debarment and Suspension

Contracts over $25,000

(1) This contract is a covered transaction for purposes of 2 C.F.R. pt. 180 and 2 C.F.R. pt. 3000. As such the contractor is required to verify that none of the contractor, its principals (defined at 2 C.F.R. § 180.995), or its affiliates (defined at 2 C.F.R. § 180.905) are excluded (defined at 2 C.F.R. § 180.940) or disqualified (defined at 2 C.F.R. § 180.935).

(2) C.F.R. pt. 3000, subpart C and must include a requirement to comply with these regulations in any lower tier covered transaction it enters into.

(3) The accompanying certification is a material representation of fact relied upon by the subrecipient. If it is later determined that the contractor did not comply with 2 C.F.R. pt. 180, subpart C and 2 C.F.R. pt. 3000, subpart C, in addition to remedies available to the Agency and subrecipient, the Federal Government may pursue available remedies, including but not limited to suspension and/or debarment.

The bidder or proposer agrees to comply with the requirements of 2 C.F.R. pt. 180, subpart C and 2 C.F.R. pt. 3000, subpart C while this offer is valid and throughout the period of any contract that may arise from this offer. The bidder or proposer further agrees to include a provision requiring such compliance in its lower tier covered transactions."

Contracts Involving Federal Privacy Act Requirements

All contracts (valued at $10,000 or more, except for construction contracts over $2,000)

The following requirements apply to the Contractor and its employees that administer any system of records on behalf of the Federal Government under any contract:

(1) The Contractor agrees to comply with, and assures the compliance of its employees with, the information restrictions and other applicable requirements of the Privacy Act of 1974, 5 U.S.C. § 552a. Among other things, the Contractor agrees to obtain the express consent of the Federal Government before the Contractor or its employees operate a system of records on behalf of the Federal Government. The Contractor understands that the requirements of the Privacy Act, including the civil and criminal penalties for violation of that Act, apply to those individuals involved, and that failure to comply with the terms of the Privacy Act may result in termination of the underlying contract.

(2) The Contractor also agrees to include these requirements in each subcontract to administer any system of records on behalf of the Federal Government financed in whole or in part with Federal assistance provided by Dept. of Fish & Wildlife.

Equal Employment Opportunity

Except as otherwise provided under 41 CFR Part 60, all contracts that meet the definition of "federally assisted construction contract" in 41 CFR Part 60-1.3 must include the equal opportunity clause provided under 41 C.F.R. § 60-1.4(b), in accordance with Executive Order No. 11246, "Equal Employment Opportunity," 42 U.S.C. § 2000e note (30 Fed. Reg. 12319, 12935, 3 C.F.R. 1964–1965 Comp., p. 339), as amended by Executive Order No. 11375, "Amending Executive Order No. 11246 Relating to Equal Employment Opportunity," (32 Fed. Reg. 14,303) and implementing regulations at 41 CFR Part 60, "Office of Federal Contract Compliance Programs, Equal Employment Opportunity, Department of Labor."

Civil Rights Requirements

All contracts (valued at $10,000 or more, except for construction contracts over $2,000)

The following requirements apply to the underlying contract:

The Recipient understands and agrees that it must comply with applicable Federal civil rights laws and regulations, and follow applicable Federal guidance, except as the Federal Government determines otherwise in writing. Therefore, unless a Recipient or a federal Program, including an Indian Tribe or the Tribal Transit Program, is specifically exempted from a civil rights statute, Federal Regulations require compliance with that civil rights statute, including compliance with equity in service requirements.

a. Nondiscrimination in Federal Public Transportation Programs. The Recipient agrees to, and assures that each Third-Party Participant will, comply with Federal transit law, 49 U.S.C. § 5332 (FTA's "Nondiscrimination" statute):

(1) FTA's "Nondiscrimination" statute prohibits discrimination on the basis of race, religion, national origin, sex (including gender identity), disability, or age.

(2) The FTA "Nondiscrimination" statute's prohibition against discrimination includes:

(a) Exclusion from participation in employment or a business opportunity,

(b) Denial of program benefits in employment or a business opportunity, or

(c) Discrimination, including discrimination in employment or business opportunity,

(3) Except as FTA determines otherwise in writing:

(a) General. Follow: 1 The most recent edition of FTA Circular 4702.1, "Title VI Requirements and Guidelines for Federal Transit Administration Recipients," to the extent consistent with applicable Federal laws, regulations, and guidance, and 2 Other applicable Federal guidance that may be issued, but

(b) Exception for the Tribal Transit Program. FTA does not require an Indian Tribe to comply with FTA program-specific guidelines for Title VI when administering its projects funded under the Tribal Transit Program,

b. Nondiscrimination – Title VI of the Civil Rights Act. The Recipient agrees to, and assures that each Third-Party Participant will:

(1) Prohibit discrimination based on race, color, and national origin,

(2) Comply with:

(a) Title VI of the Civil Rights Act of 1964, as amended, 42

U.S.C. § 2000d et seq.,

(b) U.S. DOT regulations, "Nondiscrimination in Federally-Assisted Programs of the Department of Transportation – Effectuation of Title VI of the Civil Rights Act of 1964," 49 C.F.R. part 21, and

(c) Federal transit law, specifically 49 U.S.C. § 5332, as stated in the preceding section a, and

(3) Except as FTA determines otherwise in writing, follow:

(a) The most recent edition of FTA Circular 4702.1, "Title VI and Title VI-Dependent Guidelines for Federal Transit Administration Recipients," to the extent consistent with applicable Federal laws, regulations, and guidance.

(b) U.S. DOJ, "Guidelines for the enforcement of Title VI, Civil Rights Act of 1964," 28 C.F.R. § 50.3, and

(c) Other applicable Federal guidance that may be issued,

c. Equal Employment Opportunity.

(1) Federal Requirements and Guidance. The Recipient agrees to, and assures that each Third-Party Participant will, prohibit discrimination on the basis of race, color, religion, sex, or national origin, and:

(a) Comply with Title VII of the Civil Rights Act of 1964, as amended, 42 U.S.C. § 2000e et seq.,

(b) Facilitate compliance with Executive Order No. 11246, "Equal Employment Opportunity," as amended by Executive Order No. 11375, "Amending Executive Order No. 11246, Relating to Equal Employment Opportunity," 42

U.S.C. § 2000e note,

(c) Comply with Federal transit law, specifically 49 U.S.C. § 5332, as stated in section a, and

(d) Comply with FTA Circular 4704.1other applicable EEO laws and regulations, as provided in Federal guidance, including laws and regulations prohibiting discrimination on the basis of disability, except as the Federal Government determines otherwise in writing,

(2) General. The Recipient agrees to:

(a) Ensure that applicants for employment are employed and employees are treated during employment without discrimination on the basis of their: basis of race, color, religion, sex, or national origin.

(b) Take affirmative action that includes, but is not limited to: 1 Recruitment advertising, Recruitment, and Employment, 2 Rates of pay, and other forms of compensation, 3 Selection for training, including apprenticeship and upgrading, 4 Transfers, Demotions, Layoffs, and Terminations, but

(c) Indian Tribe. Title VII of the Civil Rights Act of 1964, as amended, exempts Indian Tribes under the definition of "Employer".

(3) Equal Employment Opportunity Requirements for Construction Activities. In addition to the foregoing, when undertaking "construction" as recognized by the U.S. Department of Labor (U.S. DOL), the Recipient agrees to comply, and assures the compliance of each Third-Party Participant, with:

(a) U.S. DOL regulations, "Office of Federal Contract Compliance Programs, Equal Employment Opportunity, Department of Labor," 41 C.F.R. chapter 60, and

(b) Executive Order No. 11246, "Equal Employment Opportunity," as amended by Executive Order No. 11375, "Amending Executive Order No. 11246, Relating to Equal Employment Opportunity," 42 U.S.C. § 2000e note

d. Nondiscrimination on the Basis of Sex. The Recipient agrees to comply with Federal prohibitions against discrimination on the basis of sex, including:

(1) Title IX of the Education Amendments of 1972, as amended, 20 U.S.C. § 1681 et seq.,

(2) U.S. DOT regulations, "Nondiscrimination on the Basis of Sex in Education Programs or Activities Receiving Federal Financial Assistance," 49 C.F.R. part 25, and

(3) Federal transit law, specifically 49 U.S.C. § 5332, as stated in section a

e. Nondiscrimination on the Basis of Age. The Recipient agrees to comply with Federal prohibitions against discrimination on the basis of age, including:

(1) The Age Discrimination in Employment Act (ADEA), 29 U.S.C. §§ 621 – 634, which prohibits discrimination on the basis of age,

(2) U.S. Equal Employment Opportunity Commission (U.S. EEOC) regulations, "Age Discrimination in

Employment Act," 29 C.F.R. part 1625, which implements the ADEA,

(3) The Age Discrimination Act of 1975, as amended, 42 U.S.C. § 6101 et seq., which prohibits discrimination against individuals on the basis of age in the administration of programs or activities receiving Federal funds,

(4) U.S. Health and Human Services regulations, "Nondiscrimination on the Basis of Age in Programs or Activities Receiving Federal Financial Assistance," 45 C.F.R. part 90, which implements the Age Discrimination Act of 1975, and

(5) Federal transit law, specifically 49 U.S.C. § 5332, as stated in section a

f. Nondiscrimination on the Basis of Disability. The Recipient agrees to comply with the following Federal prohibitions pertaining to discrimination against seniors or individuals with disabilities:

(1) Federal laws, including:

(a) Section 504 of the Rehabilitation Act of 1973, as amended, 29 U.S.C. § 794, which prohibits discrimination on the basis of disability in the administration of federally funded programs or activities,

(b) The Americans with Disabilities Act of 1990 (ADA), as amended, 42 U.S.C. § 12101 et seq., which requires that accessible facilities and services be made available to individuals with disabilities, 1 General. Titles I, II, and III of the ADA apply to FTA Recipients, but 2 Indian Tribes. While Titles II and III of the ADA apply to Indian Tribes, Title I of the ADA exempts Indian Tribes from the definition of "employer,"

(c) The Architectural Barriers Act of 1968, as amended, 42 U.S.C. § 4151 et seq., which requires that buildings and public accommodations be accessible to individuals with disabilities,

(d) Federal transit law, specifically 49 U.S.C. § 5332, which now includes disability as a prohibited basis for discrimination, and

(e) Other applicable laws and amendments pertaining to access for elderly individuals or individuals with disabilities,

(2) Federal regulations, including:

(a) U.S. DOT regulations, "Transportation Services for Individuals with Disabilities (ADA)," 49 C.F.R. part 37,

(b) U.S. DOT regulations, "Nondiscrimination on the Basis of Disability in Programs and Activities Receiving or Benefiting from Federal Financial Assistance," 49 C.F.R. part 27,

(c) U.S. DOT regulations, "Transportation for Individuals with Disabilities: Passenger Vessels," 49 C.F.R. part 39,

(d) Joint U.S. Architectural and Transportation Barriers Compliance Board (U.S. ATBCB) and U.S. DOT regulations, "Americans With Disabilities (ADA) Accessibility Specifications for Transportation Vehicles," 36 C.F.R. part 1192 and 49 C.F.R. part 38,

(e) U.S. DOJ regulations, "Nondiscrimination on the Basis of Disability in State and Local Government Services," 28 C.F.R. part 35,

(f) U.S. DOJ regulations, "Nondiscrimination on the Basis of Disability by Public Accommodations and in Commercial Facilities," 28 C.F.R. part 36,

(g) U.S. EEOC, "Regulations to Implement the Equal Employment Provisions of the Americans with Disabilities Act," 29 C.F.R. part 1630,

(h) U.S. Federal Communications Commission regulations, "Telecommunications Relay Services and Related Customer Premises Equipment for Persons with Disabilities," 47 C.F.R. part 64, Subpart F,

(i) U.S. ATBCB regulations, "Electronic and Information Technology Accessibility Standards," 36 C.F.R. part 1194, and

(j) FTA regulations, "Transportation for Elderly and Handicapped Persons," 49 C.F.R. part 609, and

(k) Other applicable Federal civil rights and nondiscrimination guidance,

g. Drug or Alcohol Abuse - Confidentiality and Other Civil Rights Protections. The Recipient agrees to comply with the confidentiality and civil rights protections of:

(1) The Drug Abuse Office and Treatment Act of 1972, as amended, 21 U.S.C. § 1101 et seq.,

(2) The Comprehensive Alcohol Abuse and Alcoholism Prevention, Treatment and Rehabilitation Act of 1970, as amended, 42 U.S.C. § 4541 et seq., and

(3) The Public Health Service Act, as amended, 42 U.S.C. §§ 290dd – 290dd-2, Access to Services for People with

Limited English Proficiency. Except as the Federal Government determines otherwise in writing, the Recipient agrees to promote accessibility of public transportation services to people whose understanding of English is limited by following:

(i.) Executive Order No. 13166, "Improving Access to Services for Persons with Limited English Proficiency," August 11, 2000, 42 U.S.C. § 2000d-1 note, and

(ii.) U.S. DOT Notice, "DOT Policy Guidance Concerning Recipients' Responsibilities to Limited English Proficiency (LEP) Persons," 70 Fed. Reg. 74087, December 14, 2005

h. Other Nondiscrimination Laws. Except as the Federal Government determines otherwise in writing, the Recipient agrees to comply with other applicable federal nondiscrimination laws, regulations, and requirements, and follow federal guidance prohibiting discrimination.

i. Remedies. Remedies for failure to comply with applicable Federal Civil Rights laws and Federal regulations may be enforced as provided in those Federal laws or Federal regulations.

Breaches and Dispute Resolution

All contracts over $100,000

Disputes arising in the performance of this contract which are not resolved by agreement of the parties shall be decided in writing by the recipient's authorized representative. This decision shall be final and conclusive unless within ten days from the date of receipt of its copy, contractor mails or otherwise furnishes a written appeal to the recipient's Executive Director. In connection with such appeal, contractor shall be afforded an opportunity to be heard and to offer evidence in support of its position. The decision of the recipient's Executive Director shall be binding upon contractor and contractor shall abide by the decision. Dept. of Fish & Wildlife has a vested interest in the settlement of any violation of Federal law including the False Claims Act, 31 U.S.C. § 3729.

Performance During Dispute - Unless otherwise directed by the recipient, contractor shall continue performance under this contract while matters in dispute are being resolved.

Claims for Damages - Should either party to the contract suffer injury or damage to person or property because of any act or omission of the party or of any of his employees, agents or others for whose acts he is legally liable, a claim for damages therefore shall be made in writing to such other party within ten days after the first observance of such injury or damage.

Remedies - Unless this contract provides otherwise, all claims, counterclaims, disputes and other matters in question between the recipient and contractor arising out of or relating to this agreement or its breach will be decided by arbitration if the parties mutually agree, or in a court of competent jurisdiction within the residing State.

Rights and Remedies - Duties and obligations imposed by the contract documents and the rights and remedies available thereunder shall be in addition to and not a limitation of any duties, obligations, rights and remedies otherwise imposed or available by law. No action or failure to act by the recipient or contractor shall constitute a waiver of any right or duty afforded any of them under the contract, nor shall any such action or failure to act constitute an approval of or acquiescence in any breach thereunder, except as may be specifically agreed in writing.

The contractor must include an equivalent provision in its subagreements at every tier, for any agreement that is a "covered transaction" according to 2 C.F.R. §§ 180.220 and 1200.220.

Disadvantaged Business Enterprise (DBE)

Contracts over $10,000 awarded on the basis of a bid or proposal offering to use DBEs

a. This contract is subject to the requirements of Title 49, Code of Federal Regulations, Part 26, Participation by Disadvantaged Business Enterprises in Federal Financial Assistance Programs. The national goal for participation of Disadvantaged Business Enterprises (DBE) is 4.9**%**. The recipient's overall goal for DBE participation is listed elsewhere. If a separate contract goal for DBE participation has been established for this procurement, it is listed elsewhere.

b. The contractor shall not discriminate on the basis of race, color, national origin, or sex in the performance of this contract. The contractor shall carry out applicable requirements of 49 CFR Part 26 in the award and administration of this contract to ensure nondiscrimination. Failure by the contractor to carry out these requirements is a material breach of this contract, which may result in the termination of this contract or such other remedy as the municipal corporation deems appropriate. Each subcontract the contractor signs with a subcontractor must include the assurance in this paragraph (see 49 CFR 26.13(b)).

c. If a separate contract goal has been established, Bidders/offerors are required to document sufficient DBE participation to meet these goals or, alternatively, document adequate good faith efforts to do so, as provided for in 49 CFR 26.53.

d. If no separate contract goal has been established, the successful bidder/offeror will be required to report its DBE participation obtained through race-neutral means throughout the period of performance.

e. The contractor is required to pay its subcontractors performing work related to this contract for satisfactory performance of that work no later than 30 days after the contractor's receipt of payment for that work from the recipient. In addition, the contractor may not hold retainage from its subcontractors or must return any retainage payments to those subcontractors within 30 days after the subcontractor's work related to this contract is satisfactorily completed or must return any retainage payments to those subcontractors within 30 days after incremental acceptance of the subcontractor's work by the recipient and contractor's receipt of the partial retainage payment related to the subcontractor's work.

f. The contractor must promptly notify the recipient whenever a DBE subcontractor performing work related to this contract is terminated or fails to complete its work, and must make good faith efforts to engage another DBE subcontractor to perform at least the same amount of work. The contractor may not terminate any DBE subcontractor and perform that work through its own forces or those of an affiliate without prior written consent of the recipient.

Prompt Payment

All contracts (valued at $10,000 or more, except for construction contracts over $2,000)

The contractor is required to pay its subcontractors performing work related to this contract for satisfactory performance of that work no later than 30 days after the contractor's receipt of payment for that work. In addition, the contractor is required to return any retainage payments to those subcontractors within 30 days after the subcontractor's work related to this contract is satisfactorily completed.

The contractor must promptly notify the Agency, whenever a DBE subcontractor performing work related to this contract is terminated or fails to complete its work and must make good faith efforts to engage another DBE subcontractor to perform at least the same amount of work. The contractor may not terminate any DBE subcontractor and perform that work through its own forces or those of an affiliate without prior written consent of the Agency.

Incorporation of Federal Terms

All contracts (valued at $10,000 or more, except for construction contracts over $2,000)

The preceding provisions include, in part, certain Standard Terms & Conditions required by USDOI, whether or not expressly stated in the preceding contract provisions. All USDOI required contractual provisions, as stated in FAR and 2 CFR 200, are hereby incorporated by reference. Anything to the contrary herein notwithstanding, all DOI mandated terms shall be deemed to control in the event of a conflict with other provisions contained in this Agreement. The contractor shall not perform any act, fail to perform any act, or refuse to comply with any request that would cause the recipient to be in violation of DOI terms and conditions.

Access Requirements for Persons with Disabilities

The contractor agrees to comply with the requirements of 49 U.S.C. § 5301 (d), which states the Federal policy that the elderly and persons with disabilities have the same right as other persons to use mass transportation service and facilities, and that special efforts shall be made in planning and designing those services and facilities to implement that policy. The contractor also agrees to comply with all applicable requirements of section 504 of the Rehabilitation Act of 1973, as amended, 29 U.S.C. § 794, which prohibits discrimination on the basis of handicaps, with the Americans with Disabilities Act of 1990 (ADA), as amended, 42 U.S.C. §§ 12101 et seq., which requires that accessible facilities and services be made available to persons with disabilities, including any subsequent amendments to that Act, and with the Architectural Barriers act of 1968, as amended, 42 U.S.C. §§ 4151 et seq., which requires that buildings and public accommodations be accessible to persons with disabilities, including any subsequent amendments to that Act. In addition, the contractor agrees to comply with any and all applicable requirements issued by the DOI, DOT, DOJ, U.S. GSA, U.S. EEOC, U.S. FCC, any subsequent amendments thereto and any other nondiscrimination statute(s) that may apply to the Project.

Compliance With Federal Regulations

Any contract entered pursuant to this solicitation shall contain the following provisions: All USDOI-required contractual provisions, as set forth in 2 CFR 200, are incorporated by reference. Anything to the contrary herein notwithstanding, DOI mandated terms shall control in the event of a conflict with other provisions contained in this Agreement. Contractor shall not perform any act, fail to perform any act, or refuse to comply with any grantee request that would cause the recipient to be in violation of DOI terms and conditions. Contractor shall comply with all applicable DOI regulations, policies, procedures and directives, including, without limitation, those listed directly or incorporated by reference in the Master Agreement between the recipient and DOI, as may be amended or promulgated from time to time during the term of this contract. Contractor's failure to so comply shall constitute a material breach of this contract.

Veterans Preference.

As provided by 49 U.S.C. § 5325(k), to the extent practicable, the Recipient agrees and assures that each of its Subrecipients:

(1) Will give a hiring preference to veterans, as defined in 5 U.S.C. § 2108, who have the skills and abilities required to perform construction work required under a third party contract in connection with a Capital Project supported with federal assistance appropriated or made available for 49 U.S.C. chapter 53, and

(2) Will not require an employer to give a preference to any veteran over any equally qualified applicant who is a member of any racial or ethnic minority, female, an individual with a disability, or a former employee.

CONTRACTOR/SUBCONTRACTOR INFORMATION FOR PROJECTS
(Include with Bid)

BID/RFQ/RFP # _____

The completion of this form(s) is a requirement of this bid. A completed form is required for each contractor who submits a Bid/RFP/RFQ in response to this solicitation and for each of the bidders' subcontractors. Copy and attach additional sheets as necessary. Please provide the following information:

FIRM'S NAME: _____

PRIME CONTRACTOR _____ *SUBCONTRACTOR*_____

FIRM'S ADDRESS: _____

_____

AGE OF FIRM: _____

Minority / Woman Business Enterprise [MBE/WBE] ?* _____ Yes _____ No

If yes, Certified by the State of Connecticut Department of Administrative Services?
_____ Yes _____ No

ANNUAL GROSS RECEIPTS:

____Under $500,000 _____ $500,000 - $999,999 _____ $1,000,000 - $1,999,999
_____ $2,000,000 - $4,999,999 _____ $5,000,000 -9,999,999
_____ $10,000,000 - $14,999,999 _____ $15,000,000 -24,999,999

** Disadvantaged business enterprise or MBE/WBE means a for-profit small business concern—*
(1) That is at least 51 percent owned by one or more individuals who are both socially and economically disadvantaged or, in the case of a corporation, in which 51 percent of the stock is owned by one or more such individuals; and
(2) Whose management and daily business operations are controlled by one or more of the socially and economically disadvantaged individuals who own it.
(3) Registered with the Department or Administrative Services (DAS) and holds an active certificate.

APPENDIX A, 49 CFR PART 20--CERTIFICATION REGARDING LOBBYING

The undersigned [Contractor] certifies, to the best of his or her knowledge and belief, that:

(1) No Federal appropriated funds have been paid or will be paid, by or on behalf of the undersigned, to any person for influencing or attempting to influence an officer or employee of an agency, a Member of Congress, an officer or employee of Congress, or an employee of a Member of Congress in connection with the awarding of any Federal contract, the making of any Federal grant, the making of any Federal loan, the entering into of any cooperative agreement, and the extension, continuation, renewal, amendment, or modification of any Federal contract, grant, loan, or cooperative agreement.

(2) If any funds other than Federal appropriated funds have been paid or will be paid to any person for making lobbying contacts to an officer or employee of any agency, a Member of Congress, an officer or employee of Congress, or an employee of a Member of Congress in connection with this Federal contract, grant, loan, or cooperative agreement, the undersigned shall complete and submit Standard Form--LLL, "Disclosure Form to Report Lobbying," in accordance with its instructions [as amended by "Government wide Guidance for New Restrictions on Lobbying," 61 Fed. Reg. 1413 (1/19/96). Note: Language in paragraph (2) herein has been modified in accordance with Section 10 of the Lobbying Disclosure Act of 1995 (P.L. 104-65, to be codified at 2 U.S.C. 1601, et seq .)]

(3) The undersigned shall require that the language of this certification be included in the award documents for all subawards at all tiers (including subcontracts, subgrants, and contracts under grants, loans, and cooperative agreements) and that all subrecipients shall certify and disclose accordingly.

This certification is a material representation of fact upon which reliance was placed when this transaction was made or entered into. Submission of this certification is a prerequisite for making or entering into this transaction imposed by 31, U.S.C. § 1352 (as amended by the Lobbying Disclosure Act of 1995). Any person who fails to file the required certification shall be subject to a civil penalty of not less than $10,000 and not more than $100,000 for each such failure.

[Note: Pursuant to 31 U.S.C. § 1352(c)(1)-(2)(A), any person who makes a prohibited expenditure or fails to file or amend a required certification or disclosure form shall be subject to a civil penalty of not less than $10,000 and not more than $100,000 for each such expenditure or failure.]

The Contractor, _____, certifies or affirms the truthfulness and accuracy of each statement of its certification and disclosure, if any. In addition, the Contractor understands and agrees that the provisions of 31 U.S.C. A 3801, et seq., apply to this certification and disclosure, if any.

_____ Signature of Contractor's Authorized Official
_____ Name and Title of Contractor's Authorized Official
_____ Date

Buy America (Include with Bid)

Certification requirement for procurement of steel, iron, or manufactured products.

Certificate of Compliance with 49 U.S.C. 5323(j)(1)

The bidder or offeror hereby certifies that it will meet the requirements of 49 U.S.C. 5323(j)(1) and the applicable regulations in 49 CFR Part 661.5.

Date _____

Signature_____

Company Name_____

Title _____

Certificate of Non-Compliance with 49 U.S.C. 5323(j)(1)

The bidder or offeror hereby certifies that it cannot comply with the requirements of 49U.S.C.5323(j)(1) and 49 C.F.R. 661.5, but it may qualify for an exception pursuant to 49 5323(j)(2)(A), 5323(j)(2)(B), or 5323(j)(2)(D), and 49 C.F.R. 661.7.

Date _____

Signature _____

Company Name _____

Title _____

SUBMITTAL REQUIREMENTS

SECTION 013300

SUBMITTAL REQUIREMENTS

PART 1 - GENERAL

1.1 GENERAL PROVISIONS

A. Attention is directed to the CONTRACT AND GENERAL CONDITIONS and all Sections within DIVISION 01 - GENERAL REQUIREMENTS which are hereby made a part of this Section of the Specifications.

1.3 SUBMITTALS

A. General:

1. Review and submit to the Engineer shop drawings, project data and samples required by the Contract Documents and this Section.

2. The Contractor shall prepare and submit for the Engineer's approval two (2) weeks prior to the start of work, a Schedule of Shop Drawings, Product Data and Samples required to be submitted for the Work. The schedule shall indicate, by trade, the date by which final approval of each item must be obtained, and shall be revised as required by conditions of the Work, subject to the Engineer's approval. The Schedule of Shop Drawings, Product Data and Samples shall correspond with the demolition schedule so that the submissions relate to the time when the products and/or systems will be required on the site. The Engineer will not approve a schedule that calls for out-of-sequence submittals.

B. Specific:

1. The Contractor shall prepare a site-specific health & safety plan (HASP) to the Engineer for review for the contracted work. This HASP shall also include all subcontractor work

2. The Contractor shall prepare detailed shop drawings for the installation and construction of the observation platform. Contractor's method for installation, including equipment to be used shall be also submitted for review. Shop drawings shall be adequately detailed for construction use, including but not limited to materials, connection details, dimensions as necessary.

1.4 GENERAL CONTRACTOR'S RESPONSIBILITIES:

A. General:

1. Field measurements and construction stakeout

2. Conformance with Contract documents.

3. As-built drawings of the completed work.

4. Submittal requirements outlined in Section 1.3 above.

B. Coordinate each submittal with the requirements of the Contract Documents.

C. The General Contractor's responsibility for errors and omissions in submittals is not relieved by the Engineer's review and approval of submittals, unless the Engineer gives tentative written acceptance of specific deviations identified as such.

D. Notify the Engineer in writing at the time of submission, of deviations in submittals from requirements of Contract Documents or previous submissions.

E. Work that requires submittals shall not commence unless submitted with Engineer's stamp and initials or signature indicating review and approval.

1. No work shall be started on the job, or materials delivered to the site, until pertinent submittals have been approved by the Engineer.

F. Maintain one (1) copy of each approved submittal at the project site.

1.5 SUBMISSION REQUIREMENTS:

A. General: All submittals shall be made to the Engineer. The quantity and make-up of submittals shall be as established by the Engineer. The Contractor shall distribute all shop drawings directly to the Engineer.

B. Make submittals promptly in accordance with approved schedules, and in such sequence as to cause no delay in the work.

C. Submittals shall include:

1. Date and revision dates.
2. Project title and number.
3. The names of:
   a. Engineer;
   b. General Contractor;
   c. Subcontractor;
   d. Supplier;
   e. Manufacturer;
   f. Separate detailer when pertinent.
4. Identification of product or material.
5. Location of work and relation to adjacent structure or materials.
6. Field dimensions clearly identified as such.
7. Specification Section number and specific paragraph under which item is specified.
8. Submission number.
9. Applicable standards, such as ASTM number.
10. A blank space, five-inch by four-inch, for the Engineer's stamp.
11. Contractor's remarks. Identify exceptions or deviations from Contract Documents and reasons for them.
    a. If shop drawings submitted by the General Contractor indicate a departure from the

Contract and the Engineer deems it to be minor adjustment in the interest of the Owner (subject to concurrence by the Contractor stating it does not involve a change in Contract Price or extension of time), the Engineer may approve the submission, but the approval shall be subject to the Owner's review and acceptance of the Engineer's recommendation.

b. The approval of the Owner shall be inferred to contain in substance the following: The change is so ordered with the understanding that it does not involve any change in the Contract Price or Time, and that it is subject generally to all contract stipulations and covenants, and is without prejudice to any and all rights of the Owner under the Contract.

12. General Contractor's stamp, initialed or signed certifying review and approval of submittal.
13. Any other items as called for by the Engineer, the Owner or required by the manufacturers.
14. The Engineer reserves the right to ask for shop drawings and material certifications for any or all items on the project, whether or not requested in individual specification sections, at no additional cost to the Owner.

1.6 RESUBMISSION REQUIREMENTS:

A. Resubmission: Resubmission procedure shall follow the same procedures as the initial submittal with the following exceptions:

B. Shop Drawings:

1. Transmittal shall contain the same information as the first transmittal except that the submission number shall change sequentially. The drawing number/description shall be identical as the first transmittal but the date shall be the revised date for that submission.
2. No new material should be included on the same transmittal for the resubmission.
3. Indicate on drawings any changes which may have been made other than those requested by the Engineer.

C. Product Data and Samples:

1. Submit any new data as required from previous submittal.

1.7 THE ENGINEER'S REVIEW AND DISTRIBUTION OF SUBMISSIONS

A. The Engineer will evaluate and review submittals within the aforesaid review period timeframe (21 calendar days). After the Engineer's review, distribution shall be as stated herein.

1. If the submittal is 'reviewed - no exceptions taken', or 'reviewed, make corrections noted', the Engineer shall compose a transmittal indicating the status. The Engineer shall stamp the submittals in concurrence with the status agreed to, and transmit back to the Contractor, with one (1) copy sent directly to the Owner. The Contractor shall then distribute said submittals to appropriate subcontractors. The Engineer shall retain one (1) copy for her/his records.
2. If the submittal is 'reviewed - revise and resubmit' or 'rejected', the Engineer shall compose a transmittal indicating the status. The Engineer shall stamp the submittals in concurrence with the status agreed to and transmit back to the Contractor for resubmission. A copy of the transmittal, indicating that a submittal was disapproved and returned to the Contractor, will be forwarded from the Engineer to the Owner for their

records.

3. The review period for the Engineer will not exceed twenty-one (21) calendar days from the established date of each submission indicated on the Schedule of Shop Drawings and Product Data, plus the additional time, if any, for distribution by the Contractor and receipt of submissions by the Engineer. The Contractor is required to anticipate review time, including time for possible rejection and resubmission, in establishing Schedule dates.
   a. The aforementioned time provided to the Engineer for checking shop drawings is from the date of receipt of shop drawings by the Engineer to the mailing date of shop drawings returned to the General Contractor by the Engineer.

4. The Engineer will process the submission and indicate the appropriate action on the submission and the transmittal. Incomplete or erroneous transmittals will be returned without action.

5. The Engineer will prepare the transmittal in the following sequence:
   a. Date received from Contractor.
   b. Date returned to Contractor.
   c. Action taken on submission.
   d. Distribution, including number of copies distributed and type of material distributed (i.e., print, brochure or sample, etc.).
   e. Engineer's remarks (note major deviations from the Contract Documents).

B. Engineer's Review Procedure:

1. Stamped REVIEWED, "NO EXCEPTIONS TAKEN":
   a. No corrections or resubmissions required, fabrication may proceed.

2. Stamped REVIEWED, "MAKE CORRECTIONS NOTED":
   a. If Contractor complies with noted corrections, fabrication may proceed. Submit corrected print for final review.
   b. If, for any reason, the Contractor cannot comply with the noted corrections, fabrication shall not proceed and Contractor shall resubmit, following procedures outlined in this Section.

3. Stamped REVIEWED, “REVISE AND RESUBMIT” OR “REJECTED”:
   a. Contractor shall revise and resubmit for review. Fabrication shall not proceed.

C. Manufacturer’s Instruction

1. When required in individual Specification Section, submit manufacturer’s printed instructions for delivery, storage, assembly, installation, start-up, adjusting and finishing, in quantities specified for product data, with one (1) additional copy submitted to the Owner and one (1) copy to the Engineer.

1.8 SCHEDULE OF VALUES

A. Prior to the first request for payment, the General Contractor shall submit to the Engineer and the Owner, a Schedule of Values of the various portions of the Work in sufficient detail to reflect various major components of each trade, including quantities when requested, aggregating the total contract sum, and divided so as to facilitate payments for work under each Section. The schedule shall be prepared in such form as requested by the Owner, and it shall include data to substantiate its accuracy. Each item in the Schedule of Values shall include its proper share of overhead and profit. This schedule, including breakdown and values, requires the approval of the Engineer and the Owner and shall be used only as a basis for the Contractor's request for payment.

PART 2 – PRODUCTS
Not Used

PART 3 – EXECUTION
Not Used

END OF SECTION

GENERAL REQUIREMENTS

Index to

GENERAL REQUIREMENTS

1.	Scope of Work	G-1
2.	Standards	G-1
3.	Contract Drawings and Working Drawings	G-1
4.	Alterations	G-1
5.	Planimeter	G-2
6.	Contractor's Schedule of Operations	G-2
7.	Coordination with Other Contractors and Utilities	G-2
8.	Cost Breakdown	G-2
9.	Estimated Quantities	G-2
10.	Payment for Miscellaneous Work	G-3
11.	Drawings and Information to be Furnished by the Contractor	G-3
12.	Substitution Clause	G-3
13.	Contract Limits	G-4
14.	Work in Easements	G-4
15.	Cleaning up Site	G-4
16.	Storage of Materials	G-4
17.	Removal of Condemned Materials	G-5
18.	Hauling Materials	G-5
19.	Accommodation of Traffic	G-5
20.	Temporary Roads and Driveways	G-6
21.	Dust Control	G-6
22.	Working Conditions	G-6
23.	Work in Inclement Weather	G-6
24.	Working Hours	G-6
25.	Emergency Work	G-7
26.	Sedimentation and Erosion Control	G-7
27.	Work in Brook(s) and Stream(s)	G-7
28.	Work within Areas Designated as Inland Wetlands	G-7
29.	Soil and Groundwater Conditions	G-7
30.	General Sanitary Requirements	G-7
31.	Water Supply and Electrical Energy	G-8
32.	Contractor's Office	G-8
33.	Resident Engineer's Office	G-8
34.	Explosives and Blasting	G-8
35.	Sheeting, Shoring and Bracing	G-8
36.	Existing Structures	G-8
37.	Marking New Underground Plant	G-9
38.	Operation of Valves	G-9
39.	Testing Laboratories	G-9
40.	Wage Rates	G-9

City of Derby
O'Sullivan's Island Fishing and Viewing Platform

GENERAL REQUIREMENTS

1. Scope of Work

The project consists of the installation of an ADA compliant fishing pier and viewing platform located on O'Sullivan Island on the Housatonic River. The pier is located southeast from the Commodore Hull Bridge along the shore of the river.

The City reserves the right to decrease the Scope of Work to be done under this Contract, select bid or alternate items in its best interest, or to omit any work in order to bring the cost within available funds. Exercise by the City of the above rights shall not constitute any grounds or basis of claim for damages or for anticipated profits on work omitted.

2. Standards

Wherever reference is made in this Contract to the Standard of any technical society or other recognized organization, these shall be construed to mean the latest standard adopted and published at the date of advertisement for bids.

Abbreviations are defined as follows:

ASTM --	American Society of Testing and Materials.
ANSI --	American National Standards Institute
ASA --	American Standards Association
ACI --	American Concrete Institute
AASHTO --	American Association of State Highway and Transportation Officials
ASME --	American Society of Mechanical Town of Deep River Inspectors
IEEE --	Institute of Electrical and Electronics Engineers
AWWA--	American Water Works Association
ACPA--	American Concrete Pipe Association

3. Contract Drawings and Working Drawings

The work is shown on the accompanying Contract Drawings. Such additional working drawings, as required because of changes or to provide greater detail, will be provided by the Engineer.

4. Alterations

The Engineer may make alterations to the line, grade, plan, form, dimensions, or materials of the work, or any part thereof, either before or after the commencement of the work. If such alterations increase the quantity of work, such increase will be paid for according to the quantity of such extra work actually done and at the prices stipulated for such work under unit price Items of the Contract. In case no unit price is applicable, the alterations will be paid for as extra work defined in Article XXVIII of the Contract.

5. Planimeter

The use of the planimeter shall be considered satisfactory for estimating quantities where geometric and analytic methods would be comparatively laborious.

6. Contractor's Schedule of Operations

The Contractor shall submit, within ten (10) days of the date of the Notice to Proceed, a preliminary schedule of operations for the project to the Inspector for approval. The approved preliminary schedule shall be used to prepare a detailed schedule of the principal construction events including all proposed purchase and delivery dates for items with critical delivery times. The detailed schedule shall be submitted within ten (10) days of the date of the Notice to Proceed.

The status of the project shall be evaluated monthly by the Contractor and shall be compared to the original schedule which shall be revised, if necessary, and reissued.

7. Coordination with Other Contractors and Utilities

During the progress of the work, other contractors and/or utilities may be engaged in performing work in the area. The Contractor shall coordinate the work to be done under this Contract with the work of others.

8. Cost Breakdown

If requested, the Contractor shall submit to the City of Derby Inspector for approval a detailed cost breakdown of the various amounts to be paid for within each Lump Sum Item, as applicable.

9. Estimated Quantities

To aid the Inspector in determining quantities to be paid for, the Contractor shall, whenever requested, give the Inspector access to the proper invoices, bills of lading, or other pertinent documents and shall provide methods and assistance necessary for weighing or measuring

materials.

10. Payment for Miscellaneous Work

No direct payment will be made to the Contractor for furnishing and providing miscellaneous temporary works, plants, and services, including Contractor's office, sanitary requirements, water supply, power, tools, equipment, lighting, telephone systems, store houses, store yards, safety devices, permits, insurances, bonds, watchmen, cleanup and the like, or other items specified under these General Requirements, unless payment therefore has been specifically provided. Compensation for the same is understood to be included in the scheduled prices hereinbefore given for the various kinds of work contemplated.

11. Drawings and Information to be Furnished by the Contractor

For materials and equipment not supplied by the Owner, the Contractor shall promptly furnish to the City of Derby Inspector, for his/her information, digital copies of drawings in detail of the materials, equipment, piping, and structural details for any part of the work for which Drawings are not to be issued by the Inspector. Before placing orders for any manufactured item or part of structure, he shall also submit digital copies, for approval, of detailed lists and descriptions of the various materials, fixtures, fittings and supplies which he proposes to use in the work, and also the names of individuals or companies who propose to furnish or manufacture the same. Copies of the results of all tests of materials and equipment shall be furnished by the Contractor immediately following the performance of required tests.

Prior to the submittal of shop drawings, the Contractor shall check, approve, initial and date the drawings and shall also indicate by reference the Standard Specification, Special Provision and/or Plan which covers the item. Submittals will be returned to the Contractor if they have not been properly processed by him.

Approval by the Inspector of shop drawings for any material, apparatus, device and layout shall not relieve the Contractor from the responsibility of furnishing same of proper dimension, size, quality, quantity and all performance characteristics to efficiently perform the requirements and intent of the Contract Documents. Approval shall not relieve the Contractor from the responsibility for errors of any sort on the shop drawings. If the shop drawings deviate from the Contract Documents, the Contractor shall advise the Inspector of the deviations in writing, including the reasons for the deviation.

In the event the Contractor obtains the City of Derby Inspector's approval for the material, manufactured items, or equipment, other than that which is shown on the Plans or specified herein, the Contractor shall, at his own expense, make any changes as required in the structures, buildings, piping, or any other portion of the work necessary to accommodate the approved material, manufactured item, or equipment.

12. Substitution Clause

Whenever in the Contract Documents any item of equipment or material is designated by

reference to a particular brand, manufacturer or trade name, it is understood that an approved equal product, acceptable to the Inspector, may be substituted by the Contractor, except where expressly noted as “no substitutions.”

13. Contract Limits

The Contractor shall confine his activities to within street lines, easements, and right-of-way as applicable.

The Contractor shall take particular care to existing walls, protect trees and shrubs and private personal property. He shall make good any damage to the satisfaction of the Inspector.

The Contractor shall not enter upon or make use of any private property along the line of work, outside the limits of the rights-of -way, except when written permission is secured from the owner of said property and a copy delivered to the Inspector. The Contractor shall be held responsible for all damages or injury, done by himself or those in his employ, to any private or public property of any character during the prosecution of the work. The Contractor shall restore or repair at his own expense, in a manner satisfactory to the Inspector, such property as may be damaged by his operations during the prosecution of the work.

In case of failure on the part of the Contractor to restore or repair such property in a manner satisfactory to the Owner, the Owner may, upon 48 hour notice to the Contractor, proceed with such restoration or repair. The expense of such restoration or repair shall be deducted from any monies which are due or may become due the Contractor under this Contract.

14. Work in Easements

Not applicable in this Contract.

15. Cleaning up the Site

During the progress of the work, the Contractor shall keep the construction areas in a neat condition, free from accumulations of waste materials and rubbish. Lunch papers, bottles, lumber cut-offs, drinking cups and like rubbish shall be removed from the site daily. No alcoholic beverages will be permitted at the construction site(s).

On, or before the completion of the work, and before acceptance and final payment shall be made, the Contractor shall clean and remove, from the site and adjacent property all surplus and discarded materials, rubbish, and temporary structures and restore, in an acceptable manner, all property and leave the whole area in a neat and presentable condition.

16. Storage of Materials

Materials shall be stored so as to insure the preservation of their quality and fitness for the work. When considered necessary, they shall be placed on wooden platforms and covered or stored in a suitable building, as directed by the Inspector. Stored materials shall be located so as to facilitate prompt inspections.

Materials and equipment supplied by the Owner shall be jointly inspected by the Owner and the Contractor and shall, upon acceptance by the Contractor, become the Contractor's responsibility to make good any damage to the materials and equipment until they have been incorporated and accepted in the work.

17. Removal of Condemned Materials

The Contractor shall remove from the site of the work, without delay, all rejected and condemned materials of any kind brought to or incorporated in the work. No such rejected or condemned materials shall again be offered for use by the Contractor.

18. Hauling Materials

Before starting any work, the Contractor shall arrange, with the Municipal or State officials having jurisdiction, for the use of routes of travel for hauling materials, including surplus earth and rock, that will result in minimum inconvenience to the traveling public. Routes of travel so scheduled shall be adhered to throughout the course of the work, unless otherwise approved.

19. Accommodation of Traffic

During the progress of the work, all streets shall be kept open for the passage of traffic and pedestrians and shall not be obstructed unless authorized by the authority having jurisdiction over same. Driveways, sidewalks, and areas of roadway shall be closed as short a time as possible while work is in progress and passage shall be restored by the close of work every day, by properly placed backfill or approved bridging. The Contractor shall notify residents prior to working in front of their home or business. The Contractor shall take such measures at his own expense as may be necessary to keep the street open for traffic and shall give advance notice to the Fire and Police Departments, and the Board of Education of his proposed street operations. He further agrees to be responsible for all legal notices to the public concerning the state of the roads while the work is in progress.

Warning signs shall be provided along all streets while work is in progress and, where traffic direction is required, flag men shall be designated by the Contractor to direct traffic past the equipment, machinery or construction operations. Barricades and lights shall be provided as required to protect life and property. Where trenches have been cut in streets on which traffic may pass at times, warning signs shall be placed at frequent intervals and maintained until the street is safe for travel. All such work and operations shall be in accordance with requirements of the Owner, Standard Specifications and Special Provisions herein. The use of unauthorized or unapproved signs, barricades, or traffic delineators will not be permitted.

The Contractor shall construct, maintain, without extra compensation, such adequate and proper bridges over excavations as may be necessary or directed for the purpose of accommodating pedestrians and vehicles. Ingress and egress to private property, satisfactory to the Inspector, shall be continuously provided.

Should the Contractor or his employees neglect to set out and maintain barricades or lights, as required in the Specifications, the Inspector may immediately and without notice arrange for furnishing, installing and maintaining barricades or lights and any other precaution deemed necessary. The cost thereof shall be borne by the Contractor and may be deducted from any amount due or to become due to the Contractor under this Contract.

The Contractor shall be held responsible for any damages that may have to be paid as a consequence of the Contractor's failure to protect the public.

20. Temporary Roads and Driveways

The Contractor shall be responsible for providing and maintaining such temporary access roads, to and along right-of-way. Where temporary roads, necessary for the transportation of materials and equipment are on private property, the Contractor shall obtain permission from the property owners and the City for their construction and use and pay all costs pertaining thereto.

21. Dust Control

The Contractor shall take all necessary precautions to prevent and abate nuisance caused by dust arising from his operations. Approved methods applicable to various parts of the work, such as sweeping application of water spray or calcium chloride, shall be employed. The application of water as necessary,will be at no additional cost to the owner.

22. Working Conditions

In prosecuting the work of this Contract, the Contractor shall provide working conditions on each operation that shall be as safe and healthful as the nature of the operation permits. He shall comply with all safety and sanitary rules, laws and regulations.

23. Work in Inclement Weather

During freezing, storm or inclement weather, no work shall be performed except such as can be done satisfactorily and in such manner as to secure first-class construction throughout.

24. Working Hours

The Contractor's working schedule shall be confined to a five (5) day week, Monday through Friday, and the working day shall be confined between the hours of 7:00 a.m. and 5:00 p.m. current local time, unless otherwise approved by the City of Derby Inspector.

Unless otherwise permitted by the inspector, no work shall be done between the hours of 5:00 p.m. and 7:00 a.m. except as necessary for the proper care and protection of the work already performed. If it shall become absolutely necessary to perform work at night, this shall be approved by the Inspector at least 24 hours in advance, of the beginning of the performance of

such work. Only such work shall be done at night as can be done satisfactorily and in a first-class manner. Good lighting and all other necessary facilities for carrying out and inspecting the work shall be provided and maintained at all points where such work is being done.

25. Emergency Work

The Contractor shall file, with the City of Derby Inspector, the name and telephone number of a person authorized by him who may be contacted regarding emergency works at the job site that may be required during non-working hours for reasons of public safety.

This person shall be readily available and full Authority to deal with any emergency that may occur.

26. Sedimentation and Erosion Control

The Contractor shall prepare and submit for approval a sedimentation and erosion control plan for the work, prior to the start of construction.

27. Work Near Brook(s) River(s) and Stream(s)

Care shall be taken to prevent, or reduce to a minimum, any damage to any water body from pollution by debris, sedimentation, or other material, or from manipulations of equipment and/or materials near such water bodies and on abutting property. Particular care shall be taken to prevent gasoline, diesel fuel, and other oils from entering any water body.

28. Work Within or Near Areas Designated as Inland Wetlands

Care shall be taken to prevent, or reduce to a minimum, any damage to any inland wetland from pollution by debris, sedimentation, or other material, or from manipulations of equipment and/or materials near such water bodies and on abutting property. Particular care shall be taken to prevent gasoline, diesel fuel, and other oils from entering any inland wetland.

29. Soil and Groundwater Conditions

The Owner assumes no responsibility whatsoever with respect to ascertaining for the Contractor such facts concerning physical characteristics at the site of the project. The Contractor agrees that he will make no claim for and has no right to additional payment for extension of time for completion of the work, or any other concession because of any interpretations or misunderstanding on his part of this Contract, or because of any failure on his part to fully acquaint himself with all conditions relating to the work.

30. General Sanitary Requirements

Not applicable for this contract.

31. Water Supply and Electrical Energy

Not applicable for this Contract.

32. Contractor's Officer

Not applicable for this Contract

33. Resident Engineer's Office

Not applicable for this Contract.

34. Explosives and Blasting

Not applicable for this Contract.

35. Sheeting, Shoring and Bracing

Where necessary, the sides of trenches and excavations shall be supported by adequate sheeting, shoring and bracing. The Contractor shall be held accountable and responsible for the sufficiency of all sheeting, shoring and bracing used and for all damage to persons or property resulting from the improper quality, strength, placing maintaining or removing of the same. Where sheeting is removed, care shall be taken not to disturb the new work or existing utilities and structures.

No sheeting is to be left in place unless expressly permitted by the Engineer. No direct payment will be made for sheeting, shoring, and bracing and compensation for such work and all expenses incidental thereto shall be considered as included in the unit prices bid for the various Items of this Contract.

36. Existing Structures

All known surface and underground structures, except electric and telephone service connections, and water, gas and sewer service pipes, on or immediately adjacent to the work, are shown on the Plans. Sewer, drainage, water and gas mains, manholes and similar structures located in or adjacent to the location of the structures included in this Contract, are shown on the Contract Drawings, which locations should be considered approximate. This information is shown for the convenience of the Contractor in accordance with the best information available, but is not guaranteed to be correct or complete. The Contractor shall explore the route ahead of trenching and shall uncover all known obstructing pipes sufficiently to determine their location. Necessary changes in location may be made by the Engineer to avoid unanticipated obstructions.

Wherever water or gas mains, electric or telephone ducts, or electric or telephone poles are encountered and may be in any way interfered with, the Contractor shall keep the utility company involved fully informed in advance. The Contractor shall cooperate with the utility

company in the protection, removal, relocation and replacement of such structures.

The Contractor shall, at his own expense, sustain in their places and protect from direct or indirect injury all utilities, pipes, poles, conduit, walls, buildings and other structures and property in the vicinity of his work, and he shall be responsible for all damage and assume all expense for direct or indirect injury caused by his work to any of them or to any person or property by reason of injury to them.

Guard rails, posts, guard cables, signs, poles, markers, mailboxes, fences, walls and stone walls, and other private improvements, which are temporarily removed, damaged or destroyed during construction, shall be replaced and restored to a condition as good as or better than existed and to the satisfaction of the Owner or Inspector.

The Contractor shall, at his own expense, retain the services of a licensed surveyor to replace property markers, on or adjacent to privately owned property, which have been disturbed during the course of construction.

37. Marking New Underground Plant

All new underground plant shall be marked with warning tape in accordance with State of Connecticut Public Act 16-345 and DPUC Regulations.

38. Operation of Water Valves

Unless otherwise permitted, existing water valves shall not be operated by the Contractor. Whenever the operation of a water valve is necessary, the Contractor shall make arrangements, at least 24 hours in advance of the need, to have the Owner's forces perform the required operations. Contractor must prepare and distribute customer notices to all affected customers at least 24 hours prior to any shutdown of service.

39. Testing Laboratories

The Inspector shall appoint an independent testing laboratory for all material testing in accordance with the Standard Specifications, which shall paid for through the project's incidental allowance. The Inspector, in coordination with the Contractor, shall provide material samples to the laboratory, as required, throughout the duration of the project.

40. Wage Rates

The wages paid on an hourly basis to any mechanic, laborer, or workman employed upon the work herein contracted to be done, and amount of payment or contribution paid or payable on behalf of each such employee to any employee welfare fund, as defined in Section 31-53 of the General Statutes, shall be at a rate equal to the rate customary or prevailing for the same work in the same trade or occupation in the City in which such public works project is being constructed. Any Contractor who is not obligated by agreement to make payment or contribution, on behalf of such employee welfare fund, shall pay to each employee, as part of his wages, the amount of payment or contribution for his classification on each pay day.

The Contractor and any subcontractors shall comply with all Federal Statutes pertaining to the payment of prevailing wages. The Contractor shall provide to the City weekly certified payrolls of his employees and any subcontractors employed on the work.

SUPPLEMENTAL CONDITIONS

INDEX TO SUPPLEMENTAL CONDITIONS

PAGE #

1. DEFINITIONS…….. SC-1

2. SCOPE OF WORK……... SC-2

3. TIME FOR COMPLETION…….. SC-2

4. LIQUIDATED DAMAGES…… SC-2

5. PAYMENTS AND RETAINAGE…… SC-3

6. PAYMENT OF WAGES…….. SC-3

7. FAIR EMPLOYMENT PRACTICES…….. SC-3

8. CONTRACT DRAWINGS…… SC-3

9. SAFETY……. SC-4

10. LINES, GRADES, AND MEASUREMENTS…….. SC-4

11. BLASTING AND EXPLOSIVES……. SC-4

12. PUBLIC ACCESS……. SC-4

13. UTILITIES……. SC-5

14. TEMPORARY UTILITIES……. SC-5

15. TOILET ACCOMMODATIONS AND DRINKING WATER……..SC-5

16. SEQUENCE OF CONSTRUCTION…….. SC-5

17. BEST MANAGEMENT PRACTICES FOR PROTECTION OF THE ENVIRONMENT …… SC-5

18. CALL-BEFORE-YOU-DIG…… SC-6

19. DUST CONTROL SC-7

20. DESCRIPTION OF WORK SC-7

21. METHODS OF CONSTRUCTION SC-7

22. MOBILIZATION SC-7

23. EXISTING CONDITIONS..... SC-7

24. EXISTING STORM AND SEWER LINES..... SC-8

25. SURPLUS EXCAVATED MATERIAL..... SC-8

26. DAILY CLEANUP..... SC-8

27. CONSTRUCTION SCHEDULE..... SC-8

28. PROJECT MEETINGS SC-8

29. UTILITY COORDINATION..... SC-8

SUPPLEMENTAL CONDITIONS

These Supplemental Conditions amend or supplement the General Conditions of the Construction Contract and other provisions of the Contract Documents as indicated below. All provisions which are not so amended or supplemented remain in full force and effect.

1. DEFINITIONS

A. The Terms used in these Supplemental Conditions which are defined in the General Conditions of the Construction Contract have the meanings assigned to them in the General Conditions.

B. Wherever used in the Contract Documents, the following words have the meanings indicated, which are applied to both the singular and the plural thereof:

"Plans" – Titled O'Sullivan Island Fishing & Viewing Platform – See section 8 of supplemental conditions.

"Project Manual" - shall mean the bound volume containing the following Contract Documents:

Requests For Bids
Information For Bidders
Signed copy of the Bid Proposal Forms, with all attachments required for bidding
Contract Forms
General Requirements
Supplemental Conditions
Special Provisions
Performance Bond and Payment Bond
Certificate of Insurance
Addenda
Prevailing Wage Rates

The word "Remove," where it applies to existing materials, shall mean remove entirely from the site unless material is approved by the Engineer for re-use. In addition, the word "remove" shall imply the permanent patching of all remaining work affected by removal. All existing materials which have been removed shall become the Contractor's property unless otherwise specified.

"As Necessary" or "As Required" - Work referred to as "As Necessary" shall be that work which is required for completed construction, but is not necessarily shown or described in the Contract Documents.

The word "Furnish" or the word "Supply" - shall mean purchase, delivery, and off-loading at the job site including all documentation, storage, and protection.

The word "Install" or the word "Apply" - shall mean set in place complete for normal use or service, all in accordance with the Contract Documents.

The word "Provide" - shall mean furnish (or supply) and install (or apply).

The words "Approved Equal" - shall mean any product which in the opinion of the Engineer is comparable in quality, durability, appearance, strength, performance, design, physical dimension, and arrangement to the product specified, and will function properly in accordance with the design intent.

The word "Product" - shall mean any item of equipment or material provided under the Contract Documents.

2. SCOPE OF WORK

The project consists of the installation of an ADA compliant fishing pier and viewing platform located on O'Sullivan Island on the Housatonic River. The pier is located southeast from the Commodore Hull Bridge along the shore of the river.

The City reserves the right to decrease the Scope of Work to be done under this Contract, select bid or alternate items in its best interest, or to omit any work in order to bring the cost within available funds. Exercise by the City of the above rights shall not constitute any grounds or basis of claim for damages or for anticipated profits on work omitted.

3. TIME FOR COMPLETION

The Contractor shall commence work within ten (10) calendar days of the date of the written "Notice to Proceed" from the Owner and the Contractor shall fully complete this Contract by July 1, 2023.

4. LIQUIDATED DAMAGES

The Contractor shall proceed with the work at such rate of progress to ensure full completion within the time requirements stated above. It is expressly understood and agreed by and between the Contractor and the City that the Contract time for the completion of the work described herein shall be reasonable, taking into consideration the climatic and economic conditions and other factors prevailing in the locality of the work.

If the Contractor shall fail to complete the work within the Contract times, or extension of time granted by the City, then the Contractor and his sureties shall be liable for and shall pay to the City for each and every calendar day that he shall be in default in completing any given assignment in the time stipulated above, the sum of $600.00. This

sum is hereby agreed upon, not as a penalty, but as fixed liquidated damages which the Owner will suffer by reason of such default, time being of the essence of the Contract and a material consideration thereof. The Owner shall have the right to deduct the amount of any such damages from any monies due the Contractor under this Contract.

5. PAYMENTS AND RETAINAGE

Monthly applications for payment shall be submitted to the City of Derby Inspector for consideration. Payment shall be made within thirty days after approval of the application for payment by the City.

An amount of 95 percent (95%) of the estimated amount due, less any payments previously made and/or any moneys to be held will be paid to the Contractor monthly. The balance will be retained by the City until final completion of the work. Final payment will not be made until final completion and acceptance by the City of all work covered by the Contract. The Contractor agrees that he will indemnify and save the City harmless for all claims growing out of the lawful demands of subcontractors, laborers, suppliers, and assignees.

6. PAYMENT OF WAGES

The Contract Documents contain a copy of the minimum wage rate schedule issued by the Labor Department. Said wage rate schedule shall be posted at a conspicuous location on the project site.

The Contractor is cautioned that wage rates are continually changing and he shall ensure himself that the enclosed schedule is the latest issue, this being his responsibility.

7. FAIR EMPLOYMENT PRACTICES

The successful Contractor shall agree that neither he nor his subcontractors will refuse to hire or employ or to bar or to discharge from employment an individual, or to discriminate against him in compensation or ill terms, conditions, or privileges of employment because of race, color, religious creed, age, sex, national origin, or ancestry, except in the case of a bona fide occupational qualification or need.

The terms stated above are taken from Section 31-126 of the Connecticut General Statutes "Unfair Employment Practices."

8. CONTRACT DRAWINGS

The Contract Drawings, dated ***July 27, 2022*** for this project are as follows:

Sheet Title	Sheet in Set	Sheet
Title Sheet	01	-
General Notes	02	GN1.0

Site Access Plan	03	A1.0
Existing Conditions Plan	04	C1.0
Site Layout Plan	05	C1.1
North Elevation View	06	C1.2
Grading Plan	07	C1.3
Soil Erosion and Sediment Control Plan	08	C1.4
Soil Erosion and Sediment Control Notes and Details	09	C1.5
Details	10-11	C1.6, S1.0

9. SAFETY

The Contractor shall perform all work in accordance with the latest local, state, and federal governmental laws and regulations including, but not limited to, the governmental safety regulations of the Department of Labor and Office of Safety and Health Administration suggested practices.

10. LINES, GRADES, AND MEASUREMENTS

The controlling lines and grades shall be as shown on the Contract Drawings. Additional batter boards, lines, grades and forms shall be furnished and set by the Contractor if he through willfulness or carelessness removes, or permits to be removed, any reference marks establishing said controlling lines and grades, before the performance of the work requires such removal. The replacement of such reference marks shall be at the Contractor's expense.

The Contractor shall make all measurements and check all dimensions necessary for the proper construction of the work as directed or as called for in the Standard Specifications and Special Provisions.

During the performance of the work, he shall make all necessary measurements to prevent misfitting in said work and be responsible therefore for the accurate construction of the entire work.

11. BLASTING AND EXPLOSIVES

Not applicable for this Contract.

12. PUBLIC ACCESS

Roads, including driveways, sidewalks, and crossings shall remain passable while work is in progress except as noted.

13. UTILITIES

Utilities may be located within the area and may be adjacent to the construction work.

The Contractor shall make all the necessary arrangements with any utility that must be protected or relocated in order to accomplish the work. The Contractor shall be solely responsible for the protection of the operating condition of all active utilities within the areas of construction and he shall take all necessary precautions to avoid damage to existing utilities. Any cost of temporary relocations for the Contractor's convenience shall be paid for by the Contractor.

The Contractor shall avail himself of the Connecticut Underground Utility Protection Plan. The Contractor shall notify "Call Before You Dig" at 811 or visit CBYD.com at least 72 hours prior to the start of any excavation work to request the mark-out of existing utilities. The Contractor shall coordinate the construction activities with all utility companies with facilities in the project, including the City.

14. TEMPORARY UTILITIES

Unless otherwise provided for in the Standard Specifications or the Special Provisions, the Contractor shall pay the cost of all temporary light, heat, electric power and water required for completion of the Contract. The necessary temporary utilities shall be installed at the start of the project.

15. TOILET ACCOMMODATIONS AND DRINKING WATER

The Contractor shall provide necessary sanitary toilet accommodations and drinking water for the workers. Separate facilities shall be provided for female workers.

16. SEQUENCE OF CONSTRUCTION

Prior to the start of construction, the Contractor shall prepare and submit a sequence of construction for approval by the Engineer.

17. BEST MANAGEMENT PRACTICES FOR PROTECTION OF THE ENVIRONMENT

a. No construction shall proceed until proper sedimentation and erosion control methods have been installed as the sequence of construction necessitates.

b. No equipment, materials, or machinery shall be stored, cleaned, or repaired within 25 feet of any wetland or watercourse.

c. No construction shall proceed until a method to prevent construction debris, paint, spent blast materials, or other materials from entering the wetland or watercourse has been implemented as the sequence of construction necessitates. These materials shall be collected and disposed of in an environmentally safe manner as determined by

Federal, State, and local laws. The applicant shall monitor wind velocities and storm events during the conduct of such work, and shall cause such activity to cease if storm or wind conditions threaten to cause deposits of materials in the waterway.

d. No objectionable materials resulting from any clearing activity shall be disposed of in any wetland or watercourse. This includes but is not limited to: stumps, tree roots, matted roots, wood chips, and other debris.

e. No fill or materials shall be deposited in surrounding wetlands or watercourses.

f. Where dewatering is necessary, the pump shall not discharge directly into the wetland or watercourse. Proper methods and devices shall be utilized, such as pumping the water into a temporary sedimentation basin, providing surge protection at the inlet and the outlet of pumps, or floating the intake of the pump, or other method to minimize and retain the suspended solids. If the pumping operation is causing turbidity problems, work shall cease until such time that turbidity controlling measures have been implemented.

g. Dumping of oil or other deleterious materials on the ground is forbidden. The applicant shall provide a means of catching, retaining, and properly disposing of drained oil, removed oil filters, or other deleterious material. All oil spills shall be reported immediately to the DEEP/Hazardous Materials office at (860) 424-3338. Failure to do so may result in the imposition of a fine under Section 22a-450 of the Connecticut General Statutes.

h. Every precaution shall be used while working in the vicinity of a waterway to prevent and minimize degradations of the existing water quality. All activities shall conform and be at all times consistent with applicable water quality standards, and management practices of the Federal Clean Water Act (1972), Connecticut's Water Quality Standards and other applicable State laws, and as defined in Form 818, Section 1.10, entitled "Environmental Compliance".

18. CALL-BEFORE-YOU-DIG

The Contractor's attention is called to the fact that they are obligated, by State Law, to notify the Public Utilities Control Authority. The Contractor shall avail himself of the Connecticut Underground Utility Protection Plan. The Contractor shall notify “Call Before You Dig” at 811 or visit CBYD.com at least two full working days prior to the start of any excavation work to request the mark-out of existing utilities. The Contractor shall coordinate the construction activities with all utility companies with facilities in the project, including the City. The Contractor assumes all responsibilities for any damage to the various utility services, and all liabilities arising therefrom.

The Contractor shall make the necessary arrangements with the respective utility companies and provide grades for the resetting and adjusting of private utility company manhole and grade boxes, and the relocation of poles and hydrants; all at no additional

costs to the City. Any delays, which are caused by conflicts with utility lines, shall not be considered as a basis of extending the time for completion.

19. DUST CONTROL

The contractor shall be responsible for controlling dust from its operations, and when ordered by the City of Derby Inspector shall use whatever methods necessary for dust control, in a manner satisfactory to the City of Derby Inspector. This work shall be paid for under the General Conditions item in the contract.

20. DESCRIPTION OF WORK

All materials furnished and used in the completed work shall be new, of best quality, and recognized as standard in construction practices. Whenever a specification number of reference is given, the subsequent amendments (if any) shall be included. The standards set forth in the selection of materials and supplies are intended to conform to those standards adopted by the Owner. Preference in manufacture shall be given to adopted standards, and the Contractor shall further familiarize themselves with the requirements of the Owner when the occasion or choice of materials or supplies so demands.

21. METHODS OF CONSTRUCTION

No materials shall be used which are known or found to be defective in any way. Notice shall be given to the Owner of any defective or imperfect material. Defective or unfit material, found to have been used, shall be removed and replaced by the Contractor with sound and unobjectionable material without additional expense to the Owner. All materials furnished by the Contractor are subject to thorough inspections and tests by the Owner. The Contractor shall submit samples as stated in the Standard Specifications and Special Provisions or as required by the Owner, of the various materials used on the contract for testing purposes. All ordering lists shall be submitted for approval to the Owner by the Contractor.

22. MOBILIZATION/DEMOBILIZATION

This item shall consist of all the work necessary for the movement of personnel and equipment to and from the project site, including obtaining any necessary permits.

23. EXISTING CONDITIONS

Before submitting the bid, the Contractor shall examine the site, become familiar with the conditions, and verify the information in the Contract Drawings. Any discrepancy between the information provided in the Contract Documents and actual field conditions, the Contractor shall make a note of it and bring it to the attention of the Engineer prior to bid. No claims for extras will be allowed based upon differences that could have been discovered by the Contractor prior to bid.

24. EXISTING STORM AND SEWER LINES

The Contractor shall be responsible for maintaining and protecting all existing storm drainage and sewer lines encountered in the work under this contract. Hand excavation and adequate bracing and shoring shall be employed where required to insure the structural integrity of said existing structures. The Contractor shall hold the City of Derby harmless and shall be solely responsible for any liabilities or damages arising from their work near, under, or through existing sewers and culverts. The Contractor shall repair and replace, as required by the City, any existing sewers or culverts damaged as a result of their work. No payment by the City for work covered in this section, unless authorized in writing by the City of Derby.

25. SURPLUS EXCAVATED MATERIAL

Refer to specific details on the drawings regarding excavation of potentially contaminated materials.

26. DAILY CLEANUP

The Contractor shall at the end of each workday, keep the project area clean, and free from debris, excavation materials, or any other items considered as trash. These items shall be disposed of daily in a legal manner at an approved dumping site. No extra payment shall be made for any work involved in this section.

27. CONSTRUCTION SCHEDULE

At the preconstruction meeting held by the City, the Contractor shall furnish a detailed anticipated construction schedule for review and approval by the City prior to monthly payments to the Contractor. This construction schedule shall be revised to show progress to date and anticipated future progress and submitted to the City.

28. PROJECT MEETINGS

The City or its designated agent shall inspect all work performed by the Contractor and regularly scheduled project meetings with City staff, the Contractor, and the Engineer will be required on a bi-weekly basis to review progress of the work. Meetings are to be held at a site adjacent to or on the work site as determined by the City of Derby. The meetings are to be chaired by a designated representative of the City of Derby.

29. UTILITY COORDINATION

The Contractor shall coordinate the construction activities with all utility companies with facilities in the project area, including the City's. See Section 13 and 18 of the Supplemental Conditions.

SPECIAL PROVISIONS

NOTICE TO CONTRACTORS

CONSTRUCTION OF O'SULLIVAN'S FISHING AND VIEWING PLATFORM DERBY, CONNECTICUT

1. **Site:**
   The Naugatuck Valley Council of Governments (NVCOG), a political subdivision of the State of Connecticut serving the central-western Connecticut Planning Region in a coordinated effort with the City of Derby, CT is issuing this BID to select a construction firm to construct an 83-foot-long, ADA Compliant, T-shaped fishing and viewing platform and associated site upgrades at O'Sullivan's Island in the City of Derby, CT. The project will include the installation of seven (7) dolphin piers surrounding the platform, as well as the installation of wooden pilings in the Housatonic River, which will be installed using a barge equipped with pile driving equipment. The platform will include railings, benches, and a cleaning station for fish.
   Additional site work will include the installation of a concrete pad at the entrance to the platform, as well as an 87-foot-long, six (6) foot wide bituminous concrete walkway, leading from the existing gravel parking lot to the platform. The top 12 inches of soil in the vicinity of the bituminous walkway is environmentally impacted and will need to be removed (excavation by others) and handled in accordance with a reports prepared by HRP Associates, Inc. Site restoration, including the planting of trees and grass is also included in the scope of work.

2. **Project Permits:**

   The following permits have been secured for the project and are considered part of the design package:

   1. City Wetlands approval, dated December 9, 2020
   2. City Planning and Zoning approval, dated December 15, 2020.
   3. CTDEEP Land Resource Division, Structures dredging and Fill permit, dated November 5, 2021.
   4. US Army Corp of Engineer permit, dated December 17, 2021.

   The conditions set forth in in the permits secured for this project shall be considered part of the contractual agreement to perform the work.

   No in-water work shall be allowed between April 1st and June 30th inclusive.

3. **Geotechnical:**

   The intent of the design documents is to provide the Contractor with adequate criteria for a "design-build" of the pile systems. The geotechnical study, prepared by Welti Geotechnical, P.C., dated July 14, 2022 outlines the design and loading criteria for the pile systems and is considered part of the design package.

4. **Environmental Conditions;**

   Impacted soils exist within the project limits. All soils excavated for the project work shall be managed as indicated in HRP Subsurface Investigation Report, March 8, 2021.

   HRP recommends that any soils excavated from the area during construction of the proposed viewing platform and associated walkway/pathway be presumed to contain substances that are not suitable for unrestricted use on or off the Site and would require proper disposal/treatment off-Site at a permitted

waste facility. During construction, surficial soil in the vicinity of SB-05 should be removed to a depth of at least 1 ft. if this material is not removed to accommodate the proposed pathway. The excavation, handling, management and disposal of these soils will be conducted by a separate contractor under the direction of a Licensed Environmental Professional.

5. On Site Storage of Materials

The Entire project limits are within the 100-yr flood plain of the Housatonic River as well as the river floodway. No soils shall be stockpiled on site and surplus excavated soils shall be direct loaded and properly disposed of as indicated in the HRP Subsurface Investigation Report referenced above. Any construction materials stockpiled on the project site shall be secured to eliminate any shifting, movement or migration due to flood waters.

6. Traffic Control

The Contractor shall be aware that there is a construction project on State Route 34 nearby and shall coordinate his activities with that project.

WELTI GEOTECHNICAL, P.C.

GEOTECHNICAL ENGINEERING

227 Williams Street · P.O. Box 397
Glastonbury, CT 06033-0397

(860) 633-4623 / FAX (860) 657-2514

July 14, 2022

Mr. Andrew Berman, EIT
HRP Associates, Inc.
197 Scott Swamp Road
Farmington, CT 06032

Re: Geotechnical Study for Proposed O'Sullivan Island Fishing and Viewing Platform on the Housatonic River in Derby, CT

Dear Andrew:

1.0 Herewith are the foundation recommendations pertaining to the above referenced project. One boring was drilled to a depth of 58 feet below grade at auger refusal on probable bedrock. The boring was located at the top of the river bank at the general location of the proposed platform. *The boring was drilled by Clarence Welti Associates, Inc. and sampling was conducted by this firm solely to obtain indications of subsurface conditions as part of a geotechnical exploration program. No services were performed by Welti Geotechnical, P.C. to evaluate subsurface environmental conditions.*

2.0 The Subject Project will include construction of a fishing and viewing platform along the north shore of the Housatonic River in Derby. The platform will have a footprint of about 1,600 sf including a 10' wide by 37'- 8"" long walkway attached to the main platform measuring 16' wide by 82'-8" long parallel to the river. The platform will have timber or potentially composite wood construction and will be supported by wood piles. The deck surface will be at Elev. +6.5. The main platform will extend over the river bank approximately 44 feet beyond the Coastal Jurisdiction Line (CJL) El. 5.4. The land end of the walkway will be attached to a concrete anchor slab. The normal water level is about Elev. +2.0 and the MHW is Elev. +3.6. The lowest channel elevation beneath the structure will be about Elev. - 4.7. The elevations are based on the NAVD88 vertical datum. The structure will be exposed to lateral loads resulting from river flow and impact forces. The platform will be protected from the high lateral loads by wood pile dolphins located upstream and downstream of the structure. The design plans have been prepared for the pile foundations to be a design-build item in the project. ***No hydraulic and scour criteria were furnished for this study.***

3.0 The **Soil/ Rock profile** from the test boring is generally as follows:

Sandy Topsoil to about 2"

FILL; fine to coarse SAND, little Silt and Gravel, few Cobbles, trace Asphalt to 2 feet

Fine to medium SAND, little to some Silt to 15 feet, loose to medium compact

Fine to coarse SAND, trace Silt and Gravel to 30 feet, medium compact to dense

Fine to medium SAND, trace to little Silt to 43 feet, medium compact

Fine to coarse SAND, little Silt and Gravel to 56 feet, dense to very dense

Fine to coarse SAND, some Silt and Gravel to auger refusal on probable bedrock to 58 feet below grade, very dense

3.1 The **Water Table** was observed in the bore hole at 5 feet below grade on completion of the boring. The water table in the upland areas will be close to the water level in the river.

3.2 Regarding the **Estimated Properties** of the natural soils are as follows:

Soil Stratum	Unit Weight above Water Level (pcf)	Submerged Unit Weight (pcf)	Angle of Internal Friction (φ) *	Cohesion (psf)	Soil Modulus Parameter k (pci)
Natural Sand deposits to about 15 feet below grade	120	60	30°	0	25
Natural Sand deposits from 15 feet to 43 feet	125	64	34°	0	60
Glacial Moraine deposits	130	68	35°+	0	125

***** Estimated from the standard penetration test data

3.2.1 The **Bedrock** from geologic mapping appears to fall in a formation of Gneiss with probable compressive value between 10,000 and 20,000 psi.

4.0 This Evaluation pertains to recommendations for the foundation types and geotechnical design parameters for the proposed fishing platform. It has been assumed by the writer that the new platform will be designed in accordance with the Allowable Stress Design method and in U.S. customary units. This letter will have to be revised if the LRFD method is used.

4.1 The **Criteria for Foundation Type and Loading** have been arbitrarily selected as follows:

1. The maximum total settlement should not exceed 1.5".

2. The maximum differential settlement should not exceed 3/4" in 20 feet distance.

3. The horizontal deflection of the pile heads supporting the platform should not exceed 1.5" under design lateral loading. The maximum horizontal deflection of dolphin piles can be 2.5".

The above criteria have been arbitrarily assumed by the writer. If the owner, the architect, or the engineers find the criteria as unacceptable, the writer shall be informed in writing to permit additional geotechnical input.

4.2 The pile design pile loads were provided by HRP Associates as follows:

Lateral Load Case	Platform Single Pile (lbs)	Dolphin Pile Array (kips)
Current	650	-
Wave Slam	400	-
Debris Raft	250	-
Ice Impact	-	32
Vessel Impact	-	204

The maximum axial compression loading on the platform pile will be less than 10,000 lbs/pile and the uplift (tension) will be up to 4 Tons/pile.

5.0 Regarding **Foundation Type,** the fishing platform and anchor slab should be supported on piles to address the soil profile at the site. It is understood that HRP Associates proposes to use wood piles. The wood piles should conform to Class A and Class B timber piles, as cited in the paragraphs below. The piles should be manufactured from Southern Pine or Douglas Fir having the following allowable design properties:

Property	Southern Pine	Douglas Fir
Axial Compression, Fc (psi)	1200	1250
Bending, Fb (psi)	2400	2450
Shear Perpendicular To Grain (psi)	110	115
Compression Perp. to Grain (psi)	250	230
Elastic Modulus (psi)	1,500,000	1,500,000

5.01 The wood piles for support of the walkway and main platform can be with Class B, 12"x8" piles. The piles should be driven to a depth of about 30 feet below the land side grades and river channel bottom to provide allowable axial compression up to 15 Tons/pile and axial tension up to 4 Tons/ pile. The final design pile lengths by the design-build contractor should provide safety factors of at east 2.0 for axial compression and 2.5 for tension. ***The final pile penetrations might be governed by the lateral load cases.*** The pile lengths should consider local scour to be defined by the project engineer, if applicable. It is recommended that four piles at each end of the main platform and two outboard centered piles should each include an additional batter pile connected to the vertical pile. The upstream batter piles should be oriented to resist upstream generated forces. The down stream batter can be oriented for vessel impact from downstream direction. The batter at the center piles should be oriented orthogonal to the shore line. The recommended batter should be no less than 1H:6V, but should be determined so that piles will not to interfere with other piles or structures.

5.02 The wood piles for the dolphin arrays will probably require one central pile surrounded by symmetrically placed batter piles to address the high vessel lateral load. The pile arrays will probably have to consider frame action to address the high lateral loads. For the frame analyses, the fixity point along the pile shaft can be 10 feet below the channel mud line The recommended central pile is with a Class A, 14"x8" pile driven to about 30 feet below the channel bottom. The batter piles can be with Class B, 12"x8" piles driven to about 30 feet below mud line. From the lateral analyses, the allowable lateral loads from soil-pile interaction for up to 2.5" deflection of the pile heads can be 2,200 pounds for the 14" pile and 1,800 pounds for the 12" piles. The lateral component of the selected batter angle can be added to the component of soil-pile interaction.

5.1 Regarding pile capacity testing, no specific tests are necessary based on the relatively low compression loads. Acceptance criteria for the platform piles should be based on attaining a tentative blow count of 5 blows per inch in 6 continuous inches. It is possible that a setup period of at least 24 hours may be required to confirm final drive criteria. ***The final blow count criteria should be established with a WEAP analysis to be prepared by the design-build contractor based on the soil properties and the parameters of the selected hammer.*** The dolphin piles should simply be driven to the approved penetration depths.

5.2 The **Preliminary Lateral Load Analyses** of the piles considered: 1) the 14" dia. pile with 10 feet of "stickup" above mud line, and 2) the 12" dia. piles with 5 feet stickup (landward piles) and 10 feet stickup above mud line. The analyses were performed with the LPILE program by ENSOFT, Inc.[1], for free pile head condition. The computed lateral loads were based on satisfying the deflection criteria cited in section 4.0 above; 1.5" for the platform piles and 2.5" for dolphins. The lateral loads are assumed to be applied as concentrated shear loads at the pile heads. Some of those forces may actually be applied as distributed loads on the pile shafts. The preliminary allowable lateral loads for

[1]LPILE 2016.9.07, A Program for Analyzing Stress and Deformation of an Individual Pile or Drilled Shaft Under Lateral Load, ENSOFT, INC.

the 12" piles are 1,000 lbs/pile at the platform and 2,000 lbs/pile at the dolphins. The allowable lateral load for the 14" dolphin piles is 2,200 lbs/pile. The structural engineer should check all pile designs for the allowable stresses cited in the table of section 5.0 above. ***The design-build contractor should perform final lateral analyses.***

5.3 The piles can be driven thought the water and the elevated portion of the platform constructed from false work above the water or from a barge. If below grade pile caps are planned for the land end to provide lateral anchorage of the platform, the pile cap construction might have to be accomplished inside of a sealed cofferdam. The cofferdam should be with interlocked steel sheet pilings designed to resist lateral soil pressure and hydrostatic pressure at the construction design storm elevation. It should be assumed that 12" layer of ½" crushed stone will be required on subgrade in the cofferdam to facilitate de-watering and to stabilize the subgrade. The sheet pilings can serve as forms and be left in place. The design and construction of cofferdams are contractor provided items.

5.4 The **Preliminary Foundation Design Parameters** are summarized as follows:

Parameter	Value
Allowable Axial Compression on Class B 12"x8" Wood Pile driven to 35 feet below grade or mud line	15 Tons/pile
Allowable Axial Compression on Class A 14"x8" Wood Pile driven to 35 feet below grade or mud line	20 Tons/pile
Allowable Lateral Load on Class A 14"x8" Pile with Top Deflection = 2.5" Max.	2,200 lbs
Allowable Lateral Load on Class B 12"x8" Pile with Top Deflection = 2.5" Max.	2,000 lbs
Allowable Lateral Load on Class B 12"x8" Pile with Top Deflection = 1.5" Max.	1,000 lbs
Backfill Unit Weight *	125 pcf
Angle of Internal Friction, φ*	34°
Active Pressure Coefficient, K_a * (level backfill)	0.28

* Parameter for backfill conforming to CT DOT M.02.05, Grading B compacted to 95% of modified optimum density.

6.0 Regarding **Earthwork**, excavations in the soils at the site will be classified as OSHA Type C, which will require sloping of unshored excavations exceeding 5 feet in height to slopes less than 34° from the horizontal (1.5H:1V). Foundation excavations in the sand below the water table should be

in sheeted cofferdams.

7.0 This report has been prepared for specific application to the subject project in accordance with generally accepted soil and foundation engineering practices. No other warranty, express or implied, is made. In the event that any changes in the nature, design and location of structures are planned, the conclusions and recommendations contained in this report should not be considered valid unless the changes are reviewed and conclusions of this report modified or verified in writing.

The analyses and recommendations submitted in this report are based in part upon data obtained from referenced explorations. The extent of variations between explorations may not become evident until construction. If variations then appear evident, it will be necessary to re-evaluate the recommendations of this report.

Welti Geotechnical, P.C., should perform a general review of the final design and specifications in order that geotechnical design recommendations may be properly interpreted and implemented as they were intended.

Very truly yours,

John J. Bear, P.E.

Max Welti, P. E.
President, Welti Geotechnical, P.C.

APPENDIX 1

BORING LOCATION PLAN
+
TEST BORING LOGS

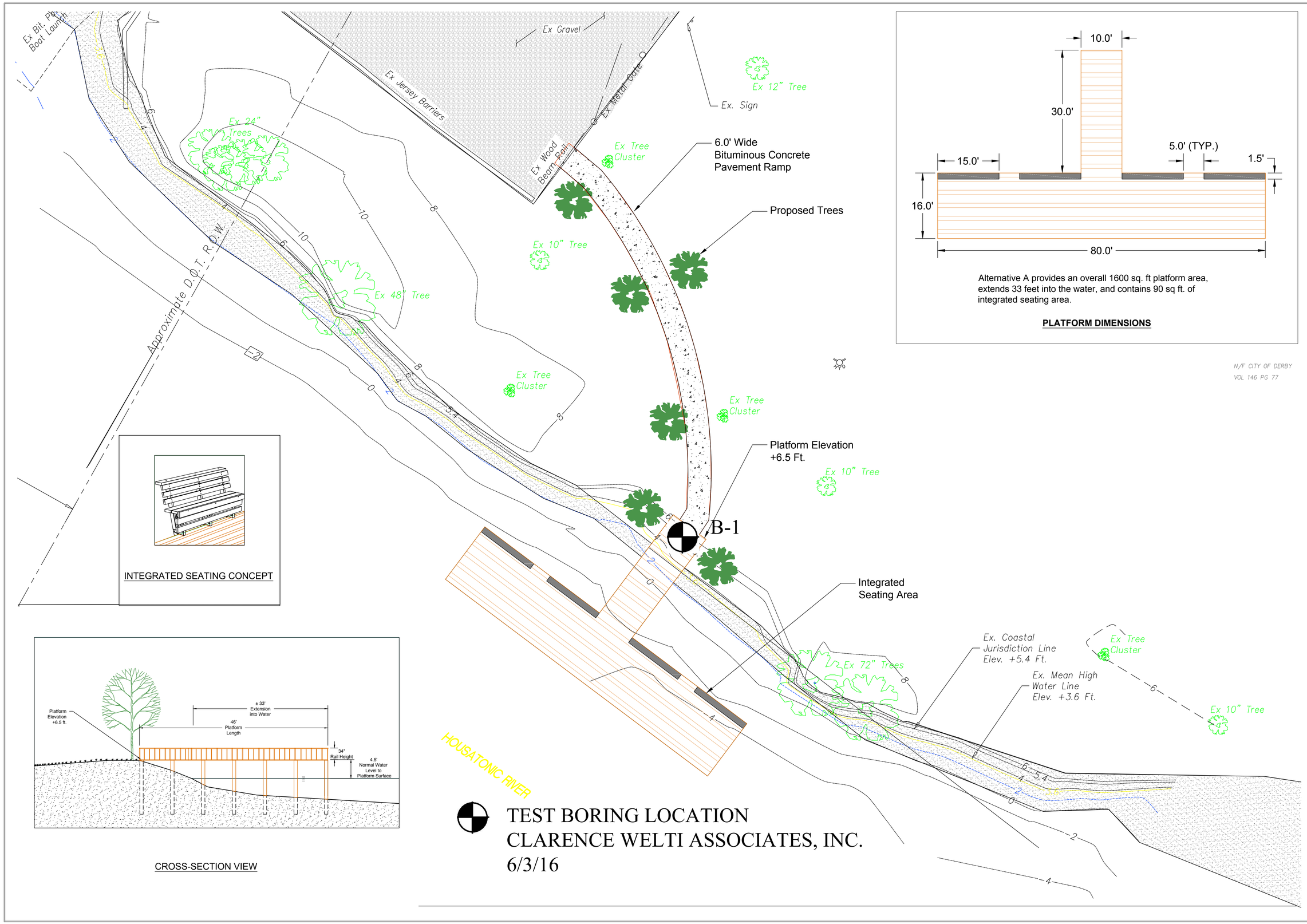

INTEGRATED SEATING CONCEPT

CROSS-SECTION VIEW

Alternative A provides an overall 1600 sq. ft platform area, extends 33 feet into the water, and contains 90 sq ft. of integrated seating area.

PLATFORM DIMENSIONS

TEST BORING LOCATION
CLARENCE WELTI ASSOCIATES, INC.
6/3/16

HRP
MOVE YOUR ENVIRONMENT FORWARD
197 SCOTT SWAMP ROAD
FARMINGTON, CT 06032
(860) 674-9570
HRPASSOCIATES.COM

NORTH

0 5' 10'

REVISIONS

NO.	DATE	DESCRIPTION

DESIGNED: JAS	SCALE: 1" = 10'
DRAWN: EJD	ISSUE DATE: 03/26/2019
REVIEWED: JAS	PROJECT NUMBER: NAU3003.CE
APPROVED: TRB	SHEET SIZE: 24"x36"

P.E. SEAL

O'SULLIVAN'S ISLAND FISHING AND VIEWING PLATFORM
DERBY, CONNECTICUT

DESIGN ALTERNATIVE A

SHEET NO.
1 OF 1

CLARENCE WELTI ASSOC., INC.
P.O. BOX 397
GLASTONBURY, CONN 06033

CLIENT
HRP ASSOCIATES

PROJECT NAME
DERBY FISHING PLATFORM
LOCATION
DERBY, CT.

	AUGER	CASING	SAMPLER	CORE BAR.
TYPE	HSA		SS	
SIZE I.D.	3.75"		1.375"	
HAMMER WT.			140 lbs	
HAMMER FALL			30"	

OFFSET
LINE & STA.
N. COORDINATE
E. COORDINATE

SURFACE ELEV.
HOLE NO. B-1

GROUND WATER OBSERVATIONS
AT 5.0 FT. AFTER 0 HOURS
AT FT. AFTER HOURS

START DATE 6/3/16
FINISH DATE 6/3/16

DEPTH	SAMPLE NO.	BLOWS/6"	DEPTH	A	STRATUM DESCRIPTION + REMARKS	ELEV.
0	1	3-4-5-11	0.0'-2.0'		SANDY TOPSOIL 0.17	
					DARK BR. FINE-CRS. SAND, LITTLE SILT & GRAVEL, FEW COBBLES, TRACE ASPHALT - FILL	
	2	10-6-6-6	2.0'-4.0'		2.0 DARK BR. FINE-MED. SAND, SOME SILT	
	3	4-4-3-3	4.0'-6.0'			
5						
10	4	1-4-5	10.0'-11.5'		10.0 GREY FINE-MED. SAND, TRACE TO LITTLE SILT	
15	5	4-8-11	15.0'-16.5'		15.0 GREY FINE-CRS. SAND, TRACE SILT & GRAVEL	
20	6	9-10-10	20.0'-21.5'			
25	7	31-19-24	25.0'-26.5'			
30	8	6-10-14	30.0'-31.5'		30.0 BR. FINE-MED.SAND, TRACE TO LITTLE SILT	
35						

LEGEND: COL. A:
SAMPLE TYPE: D=DRY A=AUGER C=CORE U=UNDISTURBED PISTON S=SPLIT SPOON
PROPORTIONS USED: TRACE=0-10% LITTLE=10-20% SOME=20-35% AND=35-50%

DRILLER: T. CZMYR
INSPECTOR:

SHEET 1 OF 2 | HOLE NO. **B-1**

CLARENCE WELTI ASSOC., INC. P.O. BOX 397 GLASTONBURY, CONN 06033	CLIENT HRP ASSOCIATES	PROJECT NAME DERBY FISHING PLATFORM LOCATION DERBY, CT.

DEPTH	SAMPLE NO.	SAMPLE BLOWS/6"	SAMPLE DEPTH	A	STRATUM DESCRIPTION + REMARKS	ELEV.
	9	6-10-15	35.0'-36.5'			
40	10	5-7-12	40.0'-41.5'			
					GREY FINE-CRS. SAND, LITTLE SILT & GRAVEL — 43.0	
45	11	5-26-50	45.0'-46.5'			
50	12	60	50.0'-50.5'			
55	13	15-60	55.0'-55.8'			
					GREY FINE-CRS.SAND, SOME SILT & GRAVEL — 56.0	
	14	60	58.0'-58.1'		AUGER REFUSAL @ 58.1' — 58.1	
60						
65						
70						
75						

LEGEND: COL. A:

SAMPLE TYPE: D=DRY A=AUGER C=CORE U=UNDISTURBED PISTON S=SPLIT SPOON

PROPORTIONS USED: TRACE=0-10% LITTLE=10-20% SOME=20-35% AND=35-50%

DRILLER: T. CZMYR
INSPECTOR:

SHEET 2 OF 2 | HOLE NO. **B-1**

APPENDIX 2

STATIC AXIAL COMPRESSION PILE ANALYSES + PRELIMINARY L PILE LATERAL PILE ANALYSES

General Project Information	
Filename	n/a
Project Name	OSullivan Isalnd Fishing Platform
Project Client	HRP
Prepared By	mw
Project Manager	

Pile Information	
Pile Type	Timber Pile
Top of Pile (ft)	0.00
Diameter of Pile (in)	14.00

Nominal Considerations	
Water Table Depth At Time Of	
Drilling (ft)	0.00
Driving/Restrike (ft)	0.00
Nominal (ft)	0.00
Nominal Considerations	
Local Scour (ft)	0.00
Long Term Scour (ft)	0.00
Soft Soil (ft)	4.00

Nominal Soil Profile						
Layer	Soil Type	Thickness	Setup Factor	Unit Weight	Strength	Nominal Curve
1	Cohesionless	15.00 ft	1.200	120.00 pcf	30.0/30.0	Nordlund
2	Cohesionless	13.00 ft	1.000	125.00 pcf	34.0/34.0	Nordlund
3	Cohesionless	30.00 ft	1.000	130.00 pcf	36.0/36.0	Nordlund

Nominal - Summary of Capacities				
Depth (ft)	Skin Friction (kips)	End Bearing (kips)	Total Capacity (kips)	Notes
0.01	0.00	0.00	0.00	
1.00	0.00	0.00	0.00	
2.00	0.00	0.00	0.00	
3.00	0.00	0.00	0.00	
3.99	0.00	0.00	0.00	
4.01	0.00	1.78	1.78	
5.00	0.28	2.21	2.49	
6.00	0.63	2.66	3.28	
7.00	1.06	3.10	4.16	
8.00	1.58	3.54	5.12	
9.00	2.18	3.98	6.17	
10.00	2.88	4.43	7.31	
11.00	3.69	4.87	8.56	
12.00	4.59	5.31	9.90	
13.00	5.59	5.76	11.35	
14.00	6.71	5.88	12.60	
14.99	7.94	5.88	13.82	
15.01	7.97	14.08	22.04	
16.00	10.03	15.03	25.06	
17.00	12.32	15.98	28.31	
18.00	14.85	16.93	31.78	
19.00	17.61	17.87	35.48	
20.00	20.62	18.80	39.42	
21.00	23.89	19.72	43.61	
22.00	27.43	20.64	48.07	
23.00	31.23	21.56	52.79	
24.00	35.29	22.50	57.79	
25.00	39.64	23.43	63.07	
26.00	44.30	24.36	68.66	
27.00	49.28	25.28	74.56	
27.99	54.55	26.19	80.74	
28.01	54.68	39.61	94.29	
29.00	62.33	41.17	103.51	
30.00	70.62	42.75	113.37	
31.00	79.45	44.32	123.77	
32.00	88.85	45.90	134.75	
33.00	98.89	47.47	146.36	
34.00	109.59	49.04	158.64	
35.00	120.44	50.64	171.07	
36.00	131.71	52.23	183.94	
37.00	143.51	53.82	197.33	
38.00	155.93	55.41	211.34	
39.00	168.97	57.00	225.97	
40.00	182.64	58.59	241.24	

41.00	196.78	60.18	256.97	
42.00	211.57	61.78	273.34	
43.00	227.07	63.37	290.44	
44.00	243.31	64.96	308.27	
45.00	260.31	66.55	326.86	
46.00	276.10	66.97	343.08	
47.00	292.39	66.97	359.37	
48.00	309.32	66.97	376.29	
49.00	326.89	66.97	393.87	
50.00	345.14	66.97	412.11	
51.00	364.06	66.97	431.04	
52.00	383.70	66.97	450.67	
53.00	404.01	66.97	470.98	
54.00	425.03	66.97	492.01	
55.00	446.86	66.97	513.84	
56.00	469.57	66.97	536.55	
57.00	492.65	66.97	559.63	
57.99	516.31	66.97	583.29	

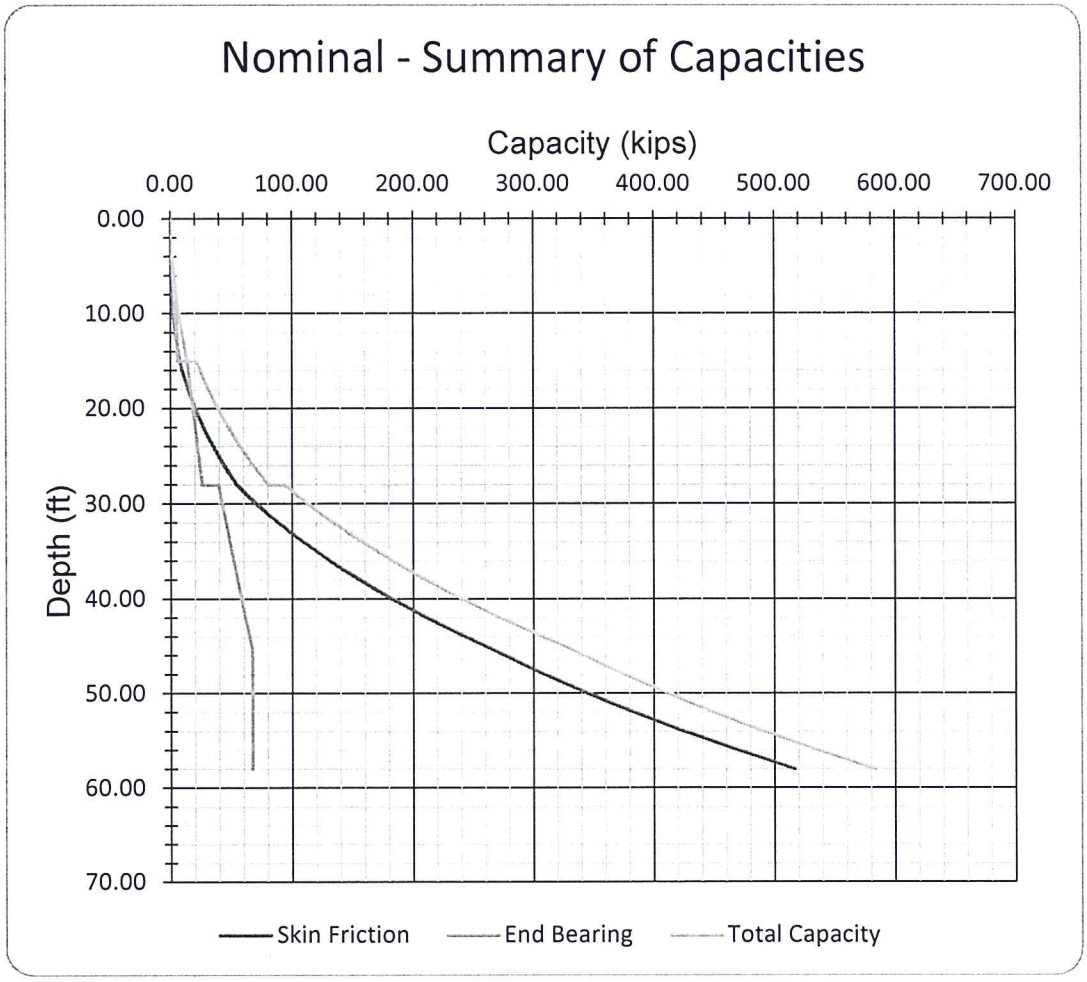
Nominal - Summary of Capacities
Capacity (kips)
0.00
100.00
200.00
300.00
400.00
500.00
600.00
700.00
Depth (ft)
0.00
10.00
20.00
30.00
40.00
50.00
60.00
70.00
Skin Friction
End Bearing
Total Capacity

General Project Information	
Filename	n/a
Project Name	OSullivan Isalnd Fishing Platform
Project Client	HRP
Prepared By	mw
Project Manager	

Pile Information	
Pile Type	Timber Pile
Top of Pile (ft)	0.00
Diameter of Pile (in)	12.00

Nominal Considerations	
Water Table Depth At Time Of	
Drilling (ft)	0.00
Driving/Restrike (ft)	0.00
Nominal (ft)	0.00
Nominal Considerations	
Local Scour (ft)	0.00
Long Term Scour (ft)	0.00
Soft Soil (ft)	4.00

Nominal Soil Profile						
Layer	Soil Type	Thickness	Setup Factor	Unit Weight	Strength	Nominal Curve
1	Cohesionless	15.00 ft	1.200	120.00 pcf	30.0/30.0	Nordlund
2	Cohesionless	13.00 ft	1.000	125.00 pcf	34.0/34.0	Nordlund
3	Cohesionless	30.00 ft	1.000	130.00 pcf	36.0/36.0	Nordlund

Nominal - Summary of Capacities				
Depth (ft)	Skin Friction (kips)	End Bearing (kips)	Total Capacity (kips)	Notes
0.01	0.00	0.00	0.00	
1.00	0.00	0.00	0.00	
2.00	0.00	0.00	0.00	
3.00	0.00	0.00	0.00	
3.99	0.00	0.00	0.00	
4.01	0.00	1.40	1.40	
5.00	0.17	1.75	1.92	
6.00	0.38	2.10	2.48	
7.00	0.65	2.45	3.10	
8.00	0.96	2.80	3.76	
9.00	1.33	3.15	4.48	
10.00	1.76	3.50	5.26	
11.00	2.24	3.85	6.09	
12.00	2.79	4.20	6.99	
13.00	3.40	4.55	7.95	
14.00	4.08	4.65	8.73	
14.99	4.82	4.65	9.47	
15.01	4.84	11.04	15.88	
16.00	6.04	11.78	17.82	
17.00	7.37	12.53	19.90	
18.00	8.84	13.26	22.10	
19.00	10.44	13.99	24.43	
20.00	12.19	14.71	26.90	
21.00	14.08	15.45	29.54	
22.00	16.12	16.19	32.31	
23.00	18.31	16.92	35.23	
24.00	20.66	17.65	38.31	
25.00	23.16	18.38	41.54	
26.00	25.85	19.10	44.95	
27.00	28.72	19.82	48.53	
27.99	31.74	20.53	52.27	
28.01	31.82	31.25	63.07	
29.00	36.43	32.48	68.91	
30.00	41.41	33.72	75.13	
31.00	46.73	34.98	81.71	
32.00	52.41	36.24	88.65	
33.00	58.46	37.49	95.95	
34.00	64.81	38.75	103.56	
35.00	71.24	40.01	111.25	
36.00	78.02	41.27	119.28	
37.00	85.13	42.52	127.65	
38.00	92.57	43.78	136.35	
39.00	100.39	45.04	145.43	
40.00	108.60	46.30	154.89	

41.00	117.16	47.55	164.72	
42.00	126.13	48.81	174.94	
43.00	135.53	50.07	185.59	
44.00	145.35	51.33	196.68	
45.00	155.63	52.58	208.21	
46.00	165.37	52.92	218.29	
47.00	175.51	52.92	228.43	
48.00	186.06	52.92	238.97	
49.00	196.98	52.92	249.90	
50.00	208.34	52.92	261.26	
51.00	220.14	52.92	273.05	
52.00	232.24	52.92	285.16	
53.00	244.53	52.92	297.45	
54.00	257.24	52.92	310.16	
55.00	270.37	52.92	323.29	
56.00	283.95	52.92	336.87	
57.00	297.97	52.92	350.89	
57.99	312.30	52.92	365.22	

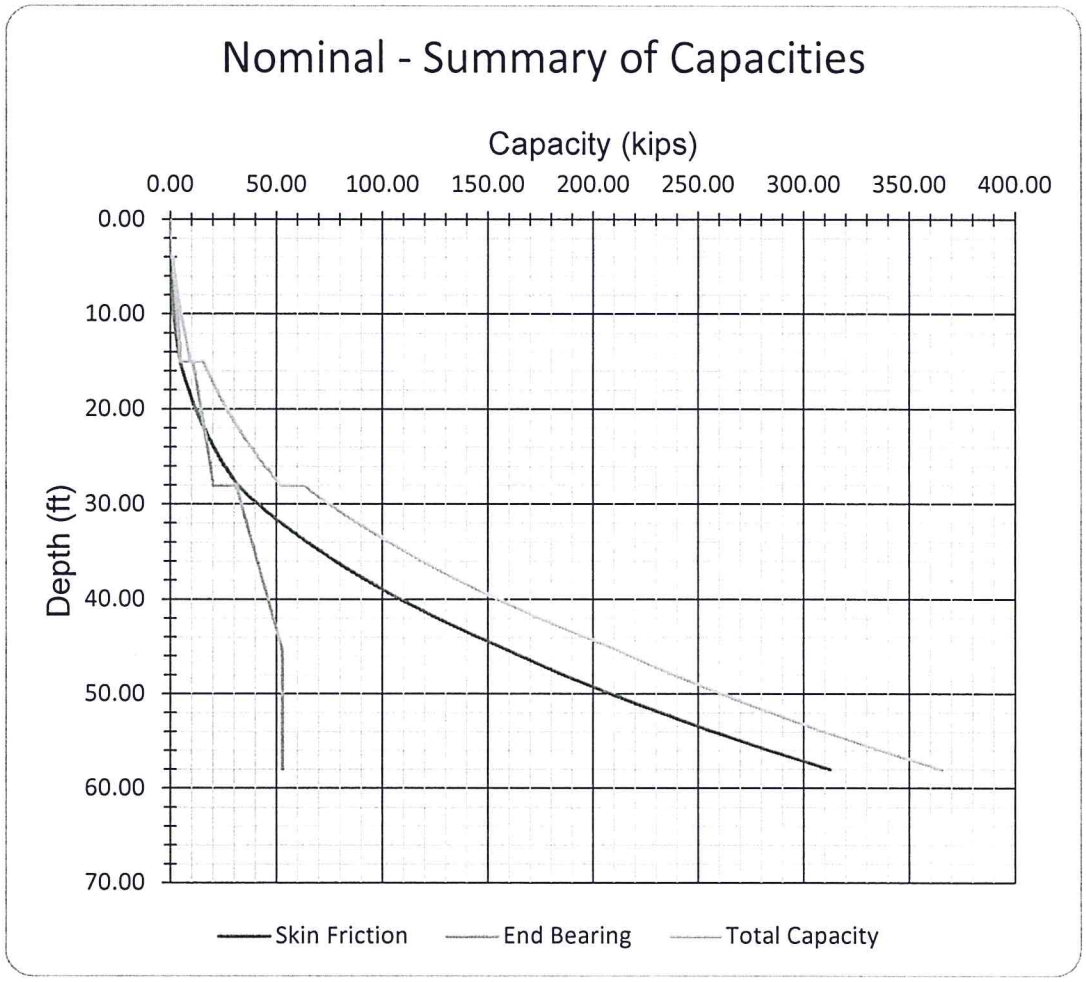
Nominal - Summary of Capacities
Capacity (kips)
0.00
50.00
100.00
150.00
200.00
250.00
300.00
350.00
400.00
Depth (ft)
0.00
10.00
20.00
30.00
40.00
50.00
60.00
70.00
Skin Friction
End Bearing
Total Capacity

DESIGN LOAD SUMMARY *

1. THE INTENT OF THESE DOCUMENTS IS TO PROVIDE ADEQUATE CRITERIA FOR A "DESIGN-BUILD" OF PILES, CONNECTION AND PILE CRITERIA. THE CONTRACTOR SHALL PROVIDE DETAILED WORKING DRAWINGS BASED ON THESE DOCUMENTS AND LOAD SUMMARY BELOW.

LOAD TABLE	
DEAD LOAD	
DEAD	30 PSF
LIVE LOAD	
PEDESTRIAN	60 PSF
SNOW	30 PSF
ICE	12 KSF BREAKUP STR.
WATER	8.9 FT/S
WIND	125 MPH
CASES: PER PILE LOAD	
LIVE PEDESTRIAN	3840 LBS
SNOW	1920 LBS
DEAD	1280 LBS
BUOYANCY	750 LBS
WAVE UPLIFT/SLAM	PROVIDE 4T UPLIFT
LATERAL CURRENT	650 LBS
LATERAL WAVE SLAM	400 LBS
LATERAL DEBRIS RAFT	250 LBS
DOLPHIN LOAD	
ICE LATERAL	32 KIP
VESSEL COLLISION	204 KIP

* From HRP ASSOCIATES

Project: O'Sullivan Fishing & Viewing Platform, Derby, CT
Subject: Lateral Pile Analysis - Class B 12x8 Platform & Dolphin 10 ft Stickup
By: Welti Geotechnical, P.C.
Date: 6-22-22

==========

LPile for Windows, Version 2016-09.007

Analysis of Individual Piles and Drilled Shafts
Subjected to Lateral Loading Using the p-y Method
© 1985-2016 by Ensoft, Inc.
All Rights Reserved

==========

This copy of LPile is being used by:

John Bear
Clarence Welti Associates
Serial Number of Security Device: 136083679

This copy of LPile is licensed for exclusive use by:

Clarence Welti Associates, Inc.,

Use of this program by any entity other than Clarence Welti Associates, Inc.,
is a violation of the software license agreement.

Files Used for Analysis

Path to file locations on this computer:
\Users\john\Desktop\Cwelti Projects\LPILE data files\

Name of the input data file:
Derbyfishingplatform+12inchwood10ft.lp9d

Name of the output report file:
Derbyfishingplatform+12inchwood10ft.lp9o

Name of the plot output file:
Derbyfishingplatform+12inchwood10ft.lp9p

Name of the runtime message file:
Derbyfishingplatform+12inchwood10ft.lp9r

Date and Time of Analysis

Date: June 22, 2022 Time: 13:45:11

Problem Title

Project Name: Derby Fishing Platform

Job Number:

Client: HRP Associates

Engineer: Welti Geotechnical, PC

Description: Lateral Analysis for Dolphin Class B 12"x8 Wood Pile

---

Program Options and Settings

Computational Options:
- Use unfactored loads in computations (conventional analysis)

Engineering Units Used for Data Input and Computations:
- US Customary System Units (pounds, feet, inches)

Analysis Control Options:
- Maximum number of iterations allowed = 500
- Deflection tolerance for convergence = 1.0000E-05 in
- Maximum allowable deflection = 100.0000 in
- Number of pile increments = 100

Loading Type and Number of Cycles of Loading:
- Static loading specified

- Use of p-y modification factors for p-y curves not selected
- No distributed lateral loads are entered
- Loading by lateral soil movements acting on pile not selected
- Input of shear resistance at the pile tip not selected
- Computation of pile-head foundation stiffness matrix not selected
- Push-over analysis of pile not selected
- Buckling analysis of pile not selected

Output Options:
- Output files use decimal points to denote decimal symbols.
- Report only summary tables of pile-head deflection, maximum bending moment, and maximum shear force in output report file.
- No p-y curves to be computed and reported for user-specified depths
- Print using narrow report formats
  (Note: Some output information is omitted from the narrow report formats)

Pile Structural Properties and Geometry

Number of pile sections defined = 1
Total length of pile = 40.000 ft
Depth of ground surface below top of pile = 10.0000 ft

Pile diameters used for p-y curve computations are defined using 2 points.

p-y curves are computed using pile diameter values interpolated with depth over the length of the pile. A summary of values of pile diameter vs. depth follows.

Point No.	Depth Below Pile Head feet	Pile Diameter inches
1	0.000	12.0000
2	40.000	8.0000

Input Structural Properties for Pile Sections:

Pile Section No. 1:

Section 1 is an elastic pile with a specified moment capacity
Cross-sectional Shape = Circular
Length of section = 40.000000 ft
Width of top of section = 12.000000 in
Width of bottom of section = 8.000000 in
Top Area = 113.097336 sq. in
Bottom Area = 50.265482 sq. in
Moment of Inertia at Top = 1018. in^4
Moment of Inertia at Bottom = 201.061930 in^4
Elastic Modulus = 1500000. psi
Plastic Moment Capacity at Top = 175000. in-lb
Plastic Moment Capacity at Bottom = 120600. in-lb
Top Elastic Bending Stiffness = 1.5268E+09 lbs-in^2
Bot Elastic Bending Stiffness = 301592895. lbs-in^2
Shear Capacity at top of section = 12400. lbs
Shear Capacity at bottom of section = 5533. lbs

Ground Slope and Pile Batter Angles

Ground Slope Angle = 10.000 degrees
= 0.175 radians

Pile Batter Angle = 0.000 degrees
= 0.000 radians

Soil and Rock Layering Information

The soil profile is modelled using 3 layers

Layer 1 is sand, p-y criteria by Reese et al., 1974

Distance from top of pile to top of layer	= 10.000000 ft
Distance from top of pile to bottom of layer	= 18.000000 ft
Effective unit weight at top of layer	= 60.000000 pcf
Effective unit weight at bottom of layer	= 60.000000 pcf
Friction angle at top of layer	= 30.000000 deg.
Friction angle at bottom of layer	= 30.000000 deg.
Subgrade k at top of layer	= 25.000000 pci
Subgrade k at bottom of layer	= 25.000000 pci

Layer 2 is sand, p-y criteria by Reese et al., 1974

Distance from top of pile to top of layer	= 18.000000 ft
Distance from top of pile to bottom of layer	= 43.000000 ft
Effective unit weight at top of layer	= 64.000000 pcf
Effective unit weight at bottom of layer	= 64.000000 pcf
Friction angle at top of layer	= 34.000000 deg.
Friction angle at bottom of layer	= 34.000000 deg.
Subgrade k at top of layer	= 60.000000 pci
Subgrade k at bottom of layer	= 60.000000 pci

Layer 3 is sand, p-y criteria by Reese et al., 1974

Distance from top of pile to top of layer	= 43.000000 ft
Distance from top of pile to bottom of layer	= 60.000000 ft
Effective unit weight at top of layer	= 70.000000 pcf
Effective unit weight at bottom of layer	= 70.000000 pcf
Friction angle at top of layer	= 35.000000 deg.
Friction angle at bottom of layer	= 35.000000 deg.
Subgrade k at top of layer	= 125.000000 pci
Subgrade k at bottom of layer	= 125.000000 pci

(Depth of the lowest soil layer extends 20.000 ft below the pile tip)

Static Loading Type

Static loading criteria were used when computing p-y curves for all analyses.

Pile-head Loading and Pile-head Fixity Conditions

Number of loads specified = 2

Load No.	Load Type	Condition 1	Condition 2	Axial Thrust Force, lbs
1	4	y = 1.500 in	M = 0.0000 in-lbs	8000.
2	4	y = 2.500 in	M = 0.0000 in-lbs	2000.

V = shear force applied normal to pile axis
M = bending moment applied to pile head
y = lateral deflection normal to pile axis
S = pile slope relative to original pile batter angle
R = rotational stiffness applied to pile head
Values of top y vs. pile lengths can be computed only for load types with specified shear loading (Load Types 1, 2, and 3).
Thrust force is assumed to be acting axially for all pile batter angles.

Computations of Nominal Moment Capacity and Nonlinear Bending Stiffness

---

Axial thrust force values were determined from pile-head loading conditions

Number of Pile Sections Analyzed = 1

Pile Section No. 1:

Moment-curvature properties were derived from elastic-plastic section properties

---

Layering Correction Equivalent Depths of Soil & Rock Layers

Layer No.	Top of Layer Below Pile Head ft	Equivalent Top Depth Below Grnd Surf ft	Same Layer Type As Layer Above	Layer is Rock or is Below Rock Layer	F0 Integral for Layer lbs	F1 Integral for Layer lbs
1	10.0000	0.00	N.A.	No	0.00	21964.
2	18.0000	8.0000	Yes	No	21964.	782478.
3	43.0000	33.0000	No	No	804442.	N.A.

Notes: The F0 integral of Layer n+1 equals the sum of the F0 and F1 integrals for Layer n. Layering correction equivalent depths are computed only for soil types with both shallow-depth and deep-depth expressions for peak lateral load transfer. These soil types are soft and stiff clays, non-liquefied sands, and cemented c-phi soil.

Summary of Pile-head Responses for Conventional Analyses

Definitions of Pile-head Loading Conditions:

Load Type 1: Load 1 = Shear, V, lbs, and Load 2 = Moment, M, in-lbs
Load Type 2: Load 1 = Shear, V, lbs, and Load 2 = Slope, S, radians
Load Type 3: Load 1 = Shear, V, lbs, and Load 2 = Rot. Stiffness, R, in-lbs/rad.
Load Type 4: Load 1 = Top Deflection, y, inches, and Load 2 = Moment, M, in-lbs
Load Type 5: Load 1 = Top Deflection, y, inches, and Load 2 = Slope, S, radians

Load Case No.	Load Type	Pile-head Deflection inches	Pile-head Rotation radians	Max Shear in Pile lbs	Max Moment in Pile in-lbs
1	4	1.5000	-0.011280	-1517.	92418.
2	4	2.5000	-0.018105	-2069.	125372.

Maximum pile-head deflection = 2.5000000000 inches
Maximum pile-head rotation = -0.0181051757 radians = -1.037350 deg.

The analysis ended normally.

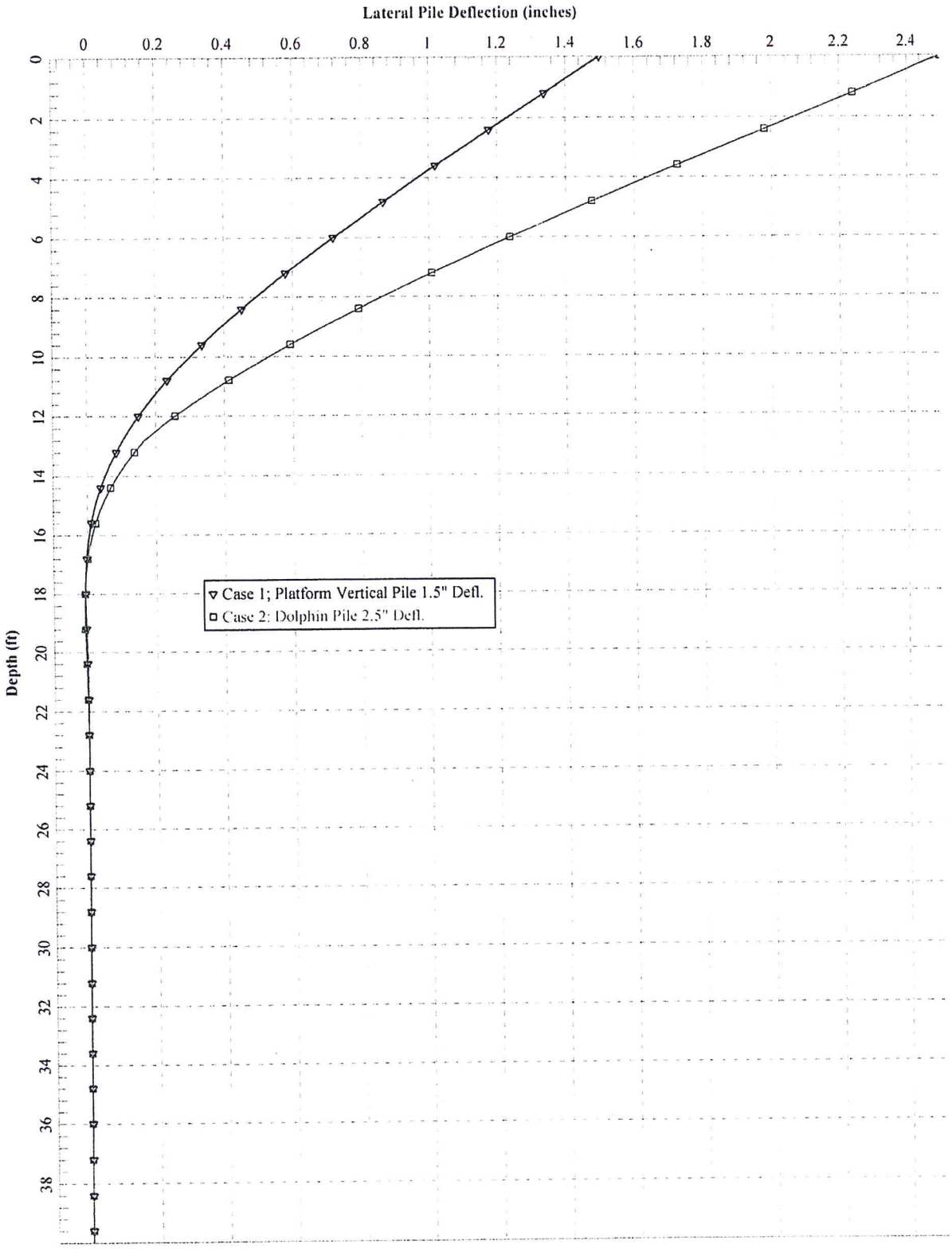

Class B 12x8 Southern Pine or Doug Fir Wood Pile 10 ft Stickup

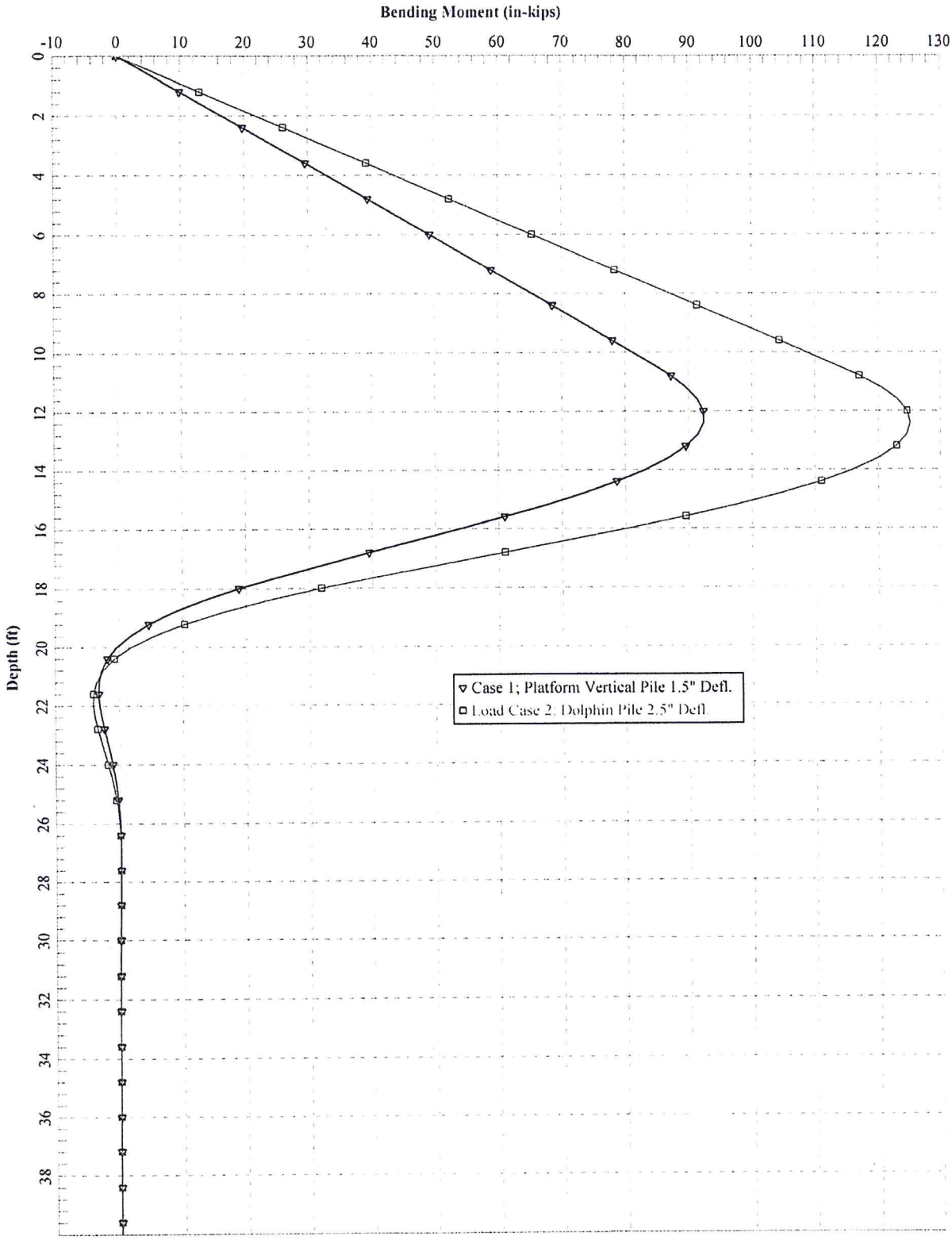

Class A 12x8 Southern Pine or Doug Fir Wood Pile 10 ft Stickup

Project: O'Sullivan Fishing & Viewing Platform, Derby, CT
Subject: Lateral Pile Analysis - Class A 14x8 Dolphin 10 ft Stickup
By: Welti Geotechnical, P.C.
Date: 6-22-22

==========

LPile for Windows, Version 2016-09.007

Analysis of Individual Piles and Drilled Shafts
Subjected to Lateral Loading Using the p-y Method
© 1985-2016 by Ensoft, Inc.
All Rights Reserved

==========

This copy of LPile is being used by:

John Bear
Clarence Welti Associates
Serial Number of Security Device: 136083679

This copy of LPile is licensed for exclusive use by:

Clarence Welti Associates, Inc.,

Use of this program by any entity other than Clarence Welti Associates, Inc.,
is a violation of the software license agreement.

Files Used for Analysis

Path to file locations on this computer:
\Users\john\Desktop\Cwelti Projects\LPILE data files\

Name of the input data file:
Derbyfishingplatform+14wood10ft.lp9d

Name of the output report file:
Derbyfishingplatform+14wood10ft.lp9o

Name of the plot output file:
Derbyfishingplatform+14wood10ft.lp9p

Name of the runtime message file:
Derbyfishingplatform+14wood10ft.lp9r

Date and Time of Analysis

Date: June 22, 2022 Time: 13:20:46

Problem Title

Project Name: Derby Fishing Platform

Job Number:

Client: HRP Associates

Engineer: Welti Geotechnical, PC

Description: Lateral Analysis for Platform Class A 14"x8 Wood Pile

---

Program Options and Settings

Computational Options:
- Use unfactored loads in computations (conventional analysis)

Engineering Units Used for Data Input and Computations:
- US Customary System Units (pounds, feet, inches)

Analysis Control Options:
- Maximum number of iterations allowed = 500
- Deflection tolerance for convergence = 1.0000E-05 in
- Maximum allowable deflection = 100.0000 in
- Number of pile increments = 100

Loading Type and Number of Cycles of Loading:
- Static loading specified

- Use of p-y modification factors for p-y curves not selected
- No distributed lateral loads are entered
- Loading by lateral soil movements acting on pile not selected
- Input of shear resistance at the pile tip not selected
- Computation of pile-head foundation stiffness matrix not selected
- Push-over analysis of pile not selected
- Buckling analysis of pile not selected

Output Options:
- Output files use decimal points to denote decimal symbols.
- Report only summary tables of pile-head deflection, maximum bending moment, and maximum shear force in output report file.
- No p-y curves to be computed and reported for user-specified depths
- Print using narrow report formats
  (Note: Some output information is omitted from the narrow report formats)

Pile Structural Properties and Geometry

Number of pile sections defined = 1
Total length of pile = 35.000 ft
Depth of ground surface below top of pile = 10.0000 ft

Pile diameters used for p-y curve computations are defined using 2 points.

p-y curves are computed using pile diameter values interpolated with depth over the length of the pile. A summary of values of pile diameter vs. depth follows.

Point No.	Depth Below Pile Head feet	Pile Diameter inches
1	0.000	14.0000
2	35.000	8.0000

Input Structural Properties for Pile Sections:

Pile Section No. 1:

Section 1 is an elastic pile with a specified moment capacity
Cross-sectional Shape = Circular
Length of section = 35.000000 ft
Width of top of section = 14.000000 in
Width of bottom of section = 8.000000 in
Top Area = 153.938040 sq. in
Bottom Area = 50.265482 sq. in
Moment of Inertia at Top = 1886. in^4
Moment of Inertia at Bottom = 201.061930 in^4
Elastic Modulus = 1500000. psi
Plastic Moment Capacity at Top = 235000. in-lb
Plastic Moment Capacity at Bottom = 120600. in-lb
Top Elastic Bending Stiffness = 2.8286E+09 lbs-in^2
Bot Elastic Bending Stiffness = 301592895. lbs-in^2
Shear Capacity at top of section = 16750. lbs
Shear Capacity at bottom of section = 5533. lbs

Ground Slope and Pile Batter Angles

Ground Slope Angle = 10.000 degrees
= 0.175 radians

Pile Batter Angle = 0.000 degrees
= 0.000 radians

Soil and Rock Layering Information

The soil profile is modelled using 3 layers

Layer 1 is sand, p-y criteria by Reese et al., 1974

Distance from top of pile to top of layer	= 10.000000 ft
Distance from top of pile to bottom of layer	= 18.000000 ft
Effective unit weight at top of layer	= 60.000000 pcf
Effective unit weight at bottom of layer	= 60.000000 pcf
Friction angle at top of layer	= 30.000000 deg.
Friction angle at bottom of layer	= 30.000000 deg.
Subgrade k at top of layer	= 25.000000 pci
Subgrade k at bottom of layer	= 25.000000 pci

Layer 2 is sand, p-y criteria by Reese et al., 1974

Distance from top of pile to top of layer	= 18.000000 ft
Distance from top of pile to bottom of layer	= 43.000000 ft
Effective unit weight at top of layer	= 64.000000 pcf
Effective unit weight at bottom of layer	= 64.000000 pcf
Friction angle at top of layer	= 34.000000 deg.
Friction angle at bottom of layer	= 34.000000 deg.
Subgrade k at top of layer	= 60.000000 pci
Subgrade k at bottom of layer	= 60.000000 pci

Layer 3 is sand, p-y criteria by Reese et al., 1974

Distance from top of pile to top of layer	= 43.000000 ft
Distance from top of pile to bottom of layer	= 60.000000 ft
Effective unit weight at top of layer	= 70.000000 pcf
Effective unit weight at bottom of layer	= 70.000000 pcf
Friction angle at top of layer	= 35.000000 deg.
Friction angle at bottom of layer	= 35.000000 deg.
Subgrade k at top of layer	= 125.000000 pci
Subgrade k at bottom of layer	= 125.000000 pci

(Depth of the lowest soil layer extends 25.000 ft below the pile tip)

Static Loading Type

Static loading criteria were used when computing p-y curves for all analyses.

Pile-head Loading and Pile-head Fixity Conditions

Number of loads specified = 1

Load No.	Load Type	Condition 1	Condition 2	Axial Thrust Force, lbs
1	4	y = 2.5000 in	M = 0.0000 in-lbs	2000.

V = shear force applied normal to pile axis
M = bending moment applied to pile head
y = lateral deflection normal to pile axis
S = pile slope relative to original pile batter angle
R = rotational stiffness applied to pile head
Values of top y vs. pile lengths can be computed only for load types with specified shear loading (Load Types 1, 2, and 3).
Thrust force is assumed to be acting axially for all pile batter angles.

Computations of Nominal Moment Capacity and Nonlinear Bending Stiffness

---

Axial thrust force values were determined from pile-head loading conditions

Number of Pile Sections Analyzed = 1

Pile Section No. 1:

Moment-curvature properties were derived from elastic-plastic section properties

---

Layering Correction Equivalent Depths of Soil & Rock Layers

Layer No.	Top of Layer Below Pile Head ft	Equivalent Top Depth Below Grnd Surf ft	Same Layer Type As Layer Above	Layer is Rock or is Below Rock Layer	F0 Integral for Layer lbs	F1 Integral for Layer lbs
1	10.0000	0.00	N.A.	No	0.00	22562.
2	18.0000	8.0000	Yes	No	22562.	529560.
3	43.0000	33.0000	No	No	552122.	N.A.

Notes: The F0 integral of Layer n+1 equals the sum of the F0 and F1 integrals for Layer n. Layering correction equivalent depths are computed only for soil types with both shallow-depth and deep-depth expressions for peak lateral load transfer. These soil types are soft and stiff clays, non-liquefied sands, and cemented c-phi soil.

Summary of Pile-head Responses for Conventional Analyses

Definitions of Pile-head Loading Conditions:

Load Type 1: Load 1 = Shear, V, lbs, and Load 2 = Moment, M, in-lbs
Load Type 2: Load 1 = Shear, V, lbs, and Load 2 = Slope, S, radians
Load Type 3: Load 1 = Shear, V, lbs, and Load 2 = Rot. Stiffness, R, in-lbs/rad.
Load Type 4: Load 1 = Top Deflection, y, inches, and Load 2 = Moment, M, in-lbs
Load Type 5: Load 1 = Top Deflection, y, inches, and Load 2 = Slope, S, radians

Load Case No.	Load Type	Pile-head Deflection inches	Pile-head Rotation radians	**Max Shear in Pile lbs**	Max Moment in Pile in-lbs
1	4	2.5000	-0.017080	**-2196.**	141084.

Maximum pile-head deflection = 2.50000 inches
Maximum pile-head rotation = -0.0170795870 radians = -0.978588 deg.

The analysis ended normally.

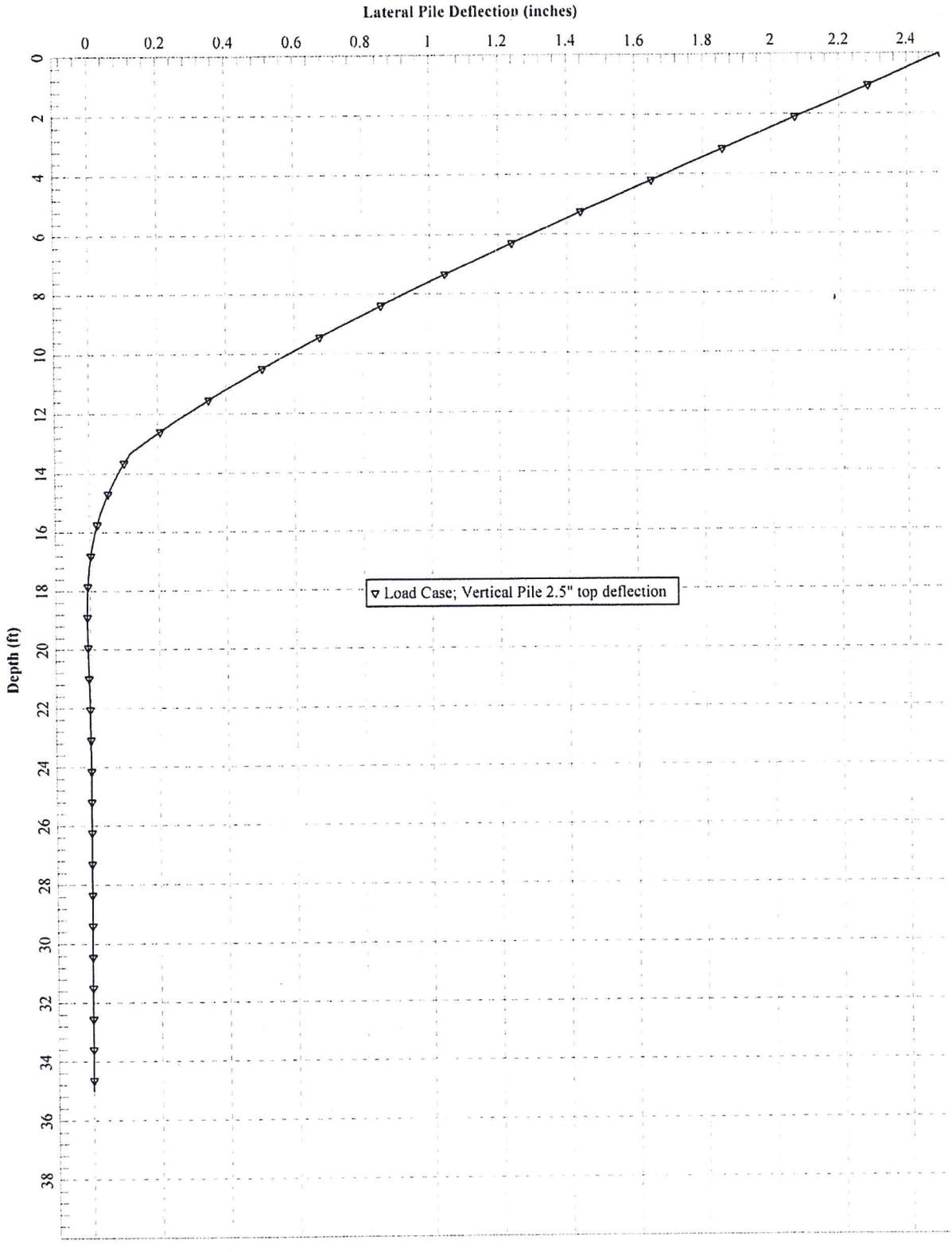

Class A 14x8 Southern Pine or Doug Fir Wood Dolphin Pile

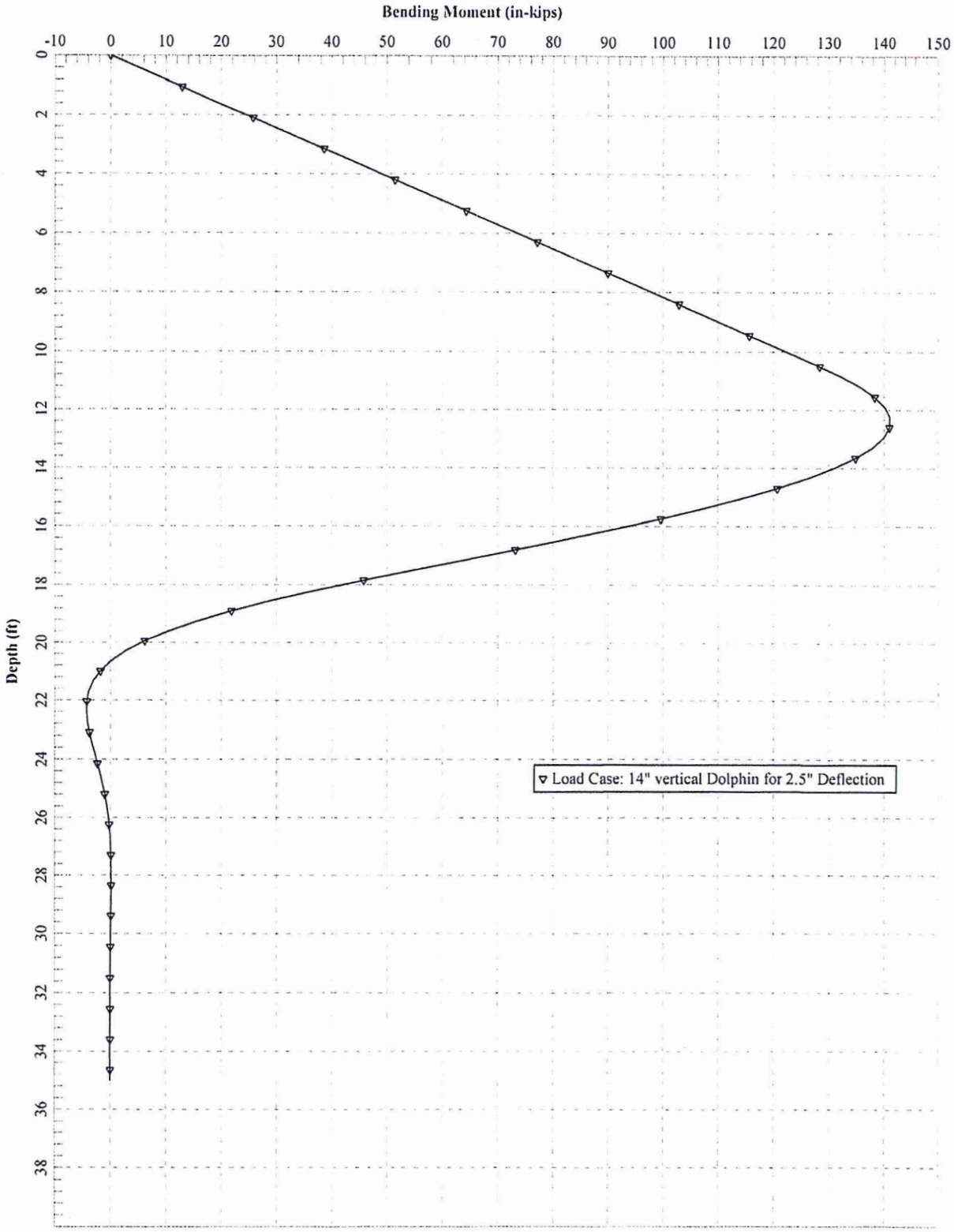

Class A 14x8 Southern Pine or Doug Fir Wood Dolphin Pile

SUBSURFACE INVESTIGATION REPORT

MOVE YOUR ENVIRONMENT FORWARD

SUBSURFACE INVESTIGATION REPORT

O'Sullivan's Island
Derby, Connecticut

Prepared For:

Mr. Arthur Bogen
Naugatuck Valley Council of Governments
49 Leavenworth Street, Suite 303
Waterbury, Connecticut 06702

Prepared By:

HRP Associates, Inc.
197 Scott Swamp Road
Farmington, Connecticut 06032

HRP #: NAU3005.P3

Issued On:

March 8, 2021

TABLE OF CONTENTS

1.0 INTRODUCTION 1

2.0 UTILITY MARKOUT AND GROUND PENETRATING RADAR SURVEY 3

2.1 Utility Markout 3
2.2 Ground Penetrating Radar 3

3.0 METHODS OF INVESTIGATION 4

3.1 Soil Boring Installation 4
3.2 Subsurface Characteristics 4
3.3 Soil Sample Intervals 5
3.4 Soil Analytical Results 5
3.5 Comparison to 2014 Analytical Results 7

4.0 QUALITY ASSURANCE/QUALITY CONTROL 9

5.0 CONCLUSIONS AND RECOMMENDATIONS 12

6.0 REFERENCES 13

Figures

Figure 1 Site Location Map
Figure 2 Site Plan
Figure 3A Benzo(a)pyrene Detections in Soil (0-1 feet)
Figure 3B ETPH Detections in Soil (0-1 feet)
Figure 3C PCB Detections in Soil (0-1 feet)

Tables

Table 1 Soil Analytical Data Summary

Appendices

Appendix A Soil Boring Logs
Appendix B Laboratory Analytical Reports
Appendix C 95% UCL Backup

General Information

Project/Site Information:
O'Sullivan's Island
Derby, Connecticut

Site Access Contact: Mr. Arthur Bogen

Client Information:
Naugatuck Valley Council of Governments
49 Leavenworth Street, Suite 303
Waterbury, Connecticut 06702

Consultant Information:
HRP Associates, Inc.
197 Scott Swamp Road
Farmington, CT 06032
Phone: 860-674-9570
Fax: 860-674-9624
Email: mike.ainsworth@hrpassociates.com
Project Number: NAU3005.P3

Report Date: 3/8/2021

Report Authors:

Ali A. LeMay
Project Geologist

Melissa L. Noryk
Sr. Project Geologist

Project Manager:

Michael R. Ainsworth, LEP, LSP, CPG
Sr. Project Manager

1.0 INTRODUCTION

HRP Associates, Inc. (HRP) has completed a Subsurface Investigation at the property identified as O'Sullivan's Island, located in Derby, Connecticut (herein referred to as the "Site"). A Site location map is included as Figure 1. The purpose of this investigation was to determine the environmental quality of subsurface soils in the vicinity of a proposed wildlife viewing platform and access pathway. The goal was to determine if soil conditions were conducive to passive recreational activities and whether any soils generated during installation of the proposed structure would require special handling and/or disposal.

O'Sullivan's Island is located on a peninsula at the confluence of the Housatonic and Naugatuck Rivers in Derby, Connecticut. The peninsula occupies approximately 20 acres of land located south of the downtown commercial district. O'Sullivan's Island (OSI) is a greenway accessible to the public for recreation and fish activities along the riverbanks. The Derby Municipal Sewer Treatment Plant borders the peninsula to the northwest and Route 8 passes the northwest boundary of the peninsula. There are two (2) distinct areas of the Site: the Former Fire Training Area, located on the western portion of OSI, and the Former Disposal Area, located in the eastern portion.

From 1948 to 1963, the Site was owned by the State of Connecticut. Since 1963, the City of Derby has owned the Site. From approximately 1970 to 1983, city contractors used the Site as a borrow pit for cover material at the Derby Landfill, located approximately two miles northeast. In 1983, a contractor discovered leaking, rusting drums in the eastern portion of the Site, near the embankments of the easternmost lagoon and the Housatonic River. The discovery of the drums prompted two (2) EPA Removal Actions completed between 1983-1985 and 2008-2009.

The initial EPA Removal Action (1983-1985) focused on removal of buried drums of waste materials and excavation of a limited amount of contaminated soil. During this removal operation, about 890 drums were removed and approximately 200 cubic yards of soil were stockpiled. Soil analysis detected concentrations of polychlorinated biphenyls (PCBs) ranging from 50 to 115 parts per million (ppm). According to previous reports, solvents collected from the drums contained mixed xylenes, toluene, phenols, PCBs, trichloroethylene, 1,1,1-trichloroethane, methyl ethyl ketone, and acetone. At the conclusion of the removal actions, soil stockpiles were left on Site.

The second EPA removal action (2008-2009) focused on delineating and removal of PCB-contaminated soil. Grid sampling was used to identify the extent of the PCB impacts at the ground surface using 162 surface samples (SS-01 through SS-126) and thirty six (36) samples collected beneath soil stockpiles (UP-01 through UP-36). Soils containing PCBs above 1 mg/kg action level were excavated and disposed. By the end of the two removal actions, a total of approximately 950 buried 55-gallon drums of waste and an estimated 11,500 tons of PCB contaminated soils were excavated and disposed off-site by the EPA. The excavation extended across a large portion of O'Sullivan's Island. In general, the goal was to remove contaminated soil in the upper 2 to 6 feet of soil. In practice, the excavation depth varied based on the following rational.

- Soil was only removed to a depth of one (1) foot below grade when bottom confirmation sampling documented PCB levels at or below the 1 mg/kg action level.
- Soil was excavated to depths up to six (6) feet below grade in some areas where leaking drums were observed.

EPA confirmation sampling results document elevated PCB levels of to 3,000 mg/kg in the excavation bottom, generally at depths of two (2) feet below grade or more.

Between 1999 and 2008, several additional environmental investigations were also conducted at O'Sullivan's Island. These investigations documented concentrations of lead, arsenic, polyaromantic hydrocarbons (PAHs), and volatile organic compounds (VOCs) at concentrations exceeding RSR soil criteria. In 2014, HRP conducted additional investigations of soil to evaluate the direct exposure risk in surficial soils at OSI. Based on an evaluation of the results, including statistical analysis, the CT Department of Public Health (DPW) issued a "Letter Health Consultation" that concluded that the exposed soils at OSI did not pose a significant risk for passive recreational use and the area was re-opened for public access.

The purpose of the Subsurface Investigation was to characterize soils in the vicinity of the proposed wildlife viewing platform and access path. The study area includes a roughly ten (10) foot buffer around the proposed wildlife viewing platform location and access path. HRP developed and implemented the scope of work based on proposed Site activities and reviewed historical documentation.

This report presents the following:

- Survey of proposed test boring locations
- Utility Markout and a Ground Penetrating Radar (GPR) Survey
- Limited Subsurface Soil Investigation
- Quality Assurance/Quality Control
- Data Summary and Evaluation

2.0 UTILITY MARKOUT AND GROUND PENETRATING RADAR SURVEY

2.1 Utility Markout

Call Before You Dig (CBYD) (a utility protection service) was contacted to identify public underground utilities at the Site prior to initiation of the subsurface investigation. Public utilities were marked at the Site. The proposed test boring locations were accurately surveyed in by Kratzert, Jones, & Associates, Inc., Land Surveyors as a subcontractor to HRP. The surveyed locations were added to a topographic map that was originally surveyed in May 2016.

2.2 Ground Penetrating Radar

On June 25, 2019, Corbuilt LLC conducted a ground penetrating radar (GPR) survey at the Site prior to drilling activities to identify subsurface utility lines and other potential subsurface obstructions. The survey also included an electromagnetic induction (EMI) survey. The GPR unit directs electromagnetic energy into the ground to measure differences in reflection and attenuation to evaluate subsurface materials in the area. The GPR can generally detect both metallic and non-metallic pipes, cables, and underground storage tanks (USTs) to a depth of up to twelve (12) feet below grade. EMI was used to identify and locate underground utilities that consist of ferrous metals. The combined methods allow for evaluating certain subsurface anomalies to accurately determine the locations of buried utilities. The boring locations and general area of the proposed wildlife viewing platform and access path were cleared of potential underground utilities. The GPR survey identified the existing water line connected to an on-Site hydrant. No other utility lines were identified in the study area.

3.0 METHODS OF INVESTIGATION

3.1 Soil Boring Installation

On July 12, 2019, an HRP geologist supervised the advancement of eleven (11) soil borings in the study area. Drilling was conducted by Glacier Drilling LLC (Glacier) using direct-push technology (Geoprobe® 6610) for all borings at the Site. The boring locations are depicted in Figure 2.

Soils were examined for physical evidence of contamination and field screened for total volatile organic compounds (VOCs) using a photo-ionization detector (PID). The PID was calibrated prior to use using isobutylene gas at a concentration of 100 parts per million (ppm). Descriptive geologic logs of the soil test borings are included in **Appendix A**.

Soil samples were selected for analysis based on field screening results, observations, and potential release mechanism. Samples selected for laboratory analysis were collected into laboratory-provided glassware and stored on ice in coolers. Samples were submitted under chain of custody to Con-Test Analytical Laboratory (Con-Test) of East Longmeadow, Massachusetts, a Connecticut certified laboratory, for analysis of one (1) or more of the following parameters:

- VOCs via EPA Method 8260
- Polyaromatic Hydrocarbons (PAHs) via EPA Method 8270
- Total RCRA 8 Metals (As, Ba, Cd, Cr, Pb, Hg, Se, and Ag)
- RCRA 8 Metals by Synthetic Precipitation Leaching Procedure (SPLP)
- Extractable Total Petroleum Hydrocarbons (ETPH) via CTDEEP Method
- Polychlorinated Biphenyls (PCBs) via EPA Method 8082 using Soxhlet extraction

3.2 Subsurface Characteristics

O'Sullivan's Island is located on a peninsula at the confluence of the Housatonic and Naugatuck Rivers in Derby, Connecticut. The Connecticut Bedrock Geologic Map identifies the underlying bedrock of the Site as Pumpkin Ground Member of Harrison Gneiss.

Geology at the Site consists primarily of brown clay, silt, and fine sand with some gravel. Groundwater was encountered at approximately 5.5 to 6 feet below grade. A summary of field observations is provided below and soil boring logs are provided in **Appendix A**.

- Anthropogenic materials indicating the presence of artificial fill were encountered in nine of the eleven soil borings to depths of 2 to 5 feet below grade. Materials observed included small fragments of asphalt, coal, brick, and glass. No staining or odors were encountered in any of the soil borings.
- Based on field observations, four main subsurface layers were encountered in the study area and are described below:
    - A layer of silt and fine to medium sand was present at the surface and ranged from 5-6.5 feet thick. This layer included anthropogenic materials, as noted above, and is presumed to be a layer of fill material.

- A layer of clay mixed with silts and/or sand was present beneath the surficial layer. This layer ranged from approximately 40-70% clay and was 0.2-2 feet thick across the Site.
- A layer of fine/medium to medium/coarse sand was present beneath the clay layer and ranged from 5.5-8.5 feet thick. Thin layers (2-6 inches) of black material and decaying wood were identified within this layer, specifically in soil borings SB-02, SB-03, SB-05, and SB-07. The organic materials may represent a former surficial horizon.
- A layer of medium to coarse sand with gravel and pebbles was observed at the bottom of each boring. Soil borings SB-01 through SB-08 were advanced to 15 feet below grade, and this layer was observed beginning at 13 to 14 feet below grade. Soil borings SB-09 through SB-11 were advanced to 20 feet below grade, and this layer was observed beginning at 14 to 15.5 feet below grade.

- The PID field screening readings for VOCs in soils were low and ranged from 0 ppm to 0.8 ppm. The highest PID reading was detected in SB-11 (5-6'), which is below the water table, thus this reading may have been affected by moisture.

3.3 Soil Sample Intervals

Soil samples were collected from each boring (SB-01 through SB-11) and analyzed for one (1) or more of the parameters listed in Section 3.1. Soil samples from the following intervals were collected from each boring and analyzed for CT ETPH, PAHs, PCBs, and total metals:

- 0 to 1 feet: This interval was selected in order to evaluate surficial soils and potential direct exposure risks. Based on Site use, exposure to soils at depth is not expected.
- 2 to 3 feet: This interval was selected in order to evaluate soils that could be exposed during the proposed development activities in the area of the proposed pathway.
- 5 to 6 feet: This interval was selected in order to evaluate soils at depth.

Additionally, at least one interval from each boring was analyzed for VOCs based on field observations. Three soil samples collected at depths greater than 6 feet were also analyzed for one or more parameter based on field observations and/or initial soil analytical results: SB-02 (8-9'), SB-04 (8-9'), and SB-05 (8-9').

3.4 Soil Analytical Results

The soil analytical results are summarized below. A summary of the soil analytical results is provided in Table 1. Copies of the laboratory analytical reports are included in **Appendix B**. The results are compared to the CTDEEP Remediation Standard Regulations (RSRs) as well as 2015 Additional Polluting Substances Criteria in order to assess the soil quality at the Site.

Metals

Three soil samples from the upper six feet of each soil boring were submitted for analysis of RCRA 8 metals, for a total of 33 samples analyzed for total metals. Total metals, including arsenic, barium, cadmium, lead, mercury, and/or silver, were detected in soil samples collected in the study

area at concentrations below RSR criteria. Total chromium was detected at a concentration of 130 milligrams per kilogram (mg/kg) in soil sample SB-03 (0-1'). The detected concentration exceeds the Residential Direct Exposure Criteria (Res DEC) for hexavalent chromium, of 100 mg/kg. However, the sample was analyzed for total chromium, which is a combination of hexavalent and trivalent chromium. Hexavalent chromium is less common and is typically unstable in the environment. Therefore, it is likely that the chromium concentration reported is predominantly trivalent chromium, which has a Res DEC of 3,900 mg/kg.

Total selenium was not detected above laboratory reporting limits in any of submitted soil samples. Total metal detections were within background ranges and comparable to concentrations typically found in Connecticut, with the exception of cadmium, chromium, and lead in the following samples, which appear to be higher than other data from this study: SB-02 (0-1'), SB-02 (2-3'), SB-03 (0-1'), SB-03 (2-3'), and SB-04 (2-3').

Selected soil samples were also analyzed for leachable metals, including cadmium, chromium, lead, and mercury, by SPLP to evaluate the potential leachability of these metals for comparison to the GB Pollutant Mobility Criteria (PMC). SPLP lead was detected above the GB PMC in soil samples SB-03 (0-1'), SB-04 (2-3'), and SB-05 (0-1'). Each of these samples had levels of total lead above what are considered background levels, with the exception of SB-05 (0-1') which had total lead within background range.

PAHs

Three soil samples from the upper six feet of each soil boring and an additional three samples from deeper intervals were submitted for analysis of PAHs, for a total of 36 samples. PAHs were detected in thirty (30) soil samples at concentrations above laboratory reporting limits.

Benzo(a)anthracene, benzo(a)pyrene, benzo(b)fluoranthene, and/or benzo(k)fluoranthene were detected in soil samples SB-02 (0-1'), SB-02 (2-3'), SB-03 (0-1'), SB-04 (0-1'), SB-05 (0-1'), SB-05 (2-3'), SB-05 (5-6'), SB-07 (0-1'), SB-08 (2-3'), SB-09 (2-3'), and SB-11 (2-3') at concentrations above RSR criteria (Res DEC and/or GB PMC). Additionally, benzo(ghi)perylene, chrysene, dibenzo(a,H)anthracene, and/or indeno(1,2,3-cd)pyrene, for which there are no established RSR criteria, were detected at levels greater than 2015 Additional Polluting Substance (APS) criteria in one or more of the samples listed above. The highest concentrations of PAHs were in test boring SB-05, which contained notably higher concentrations in the 0-1 ft sample than surrounding borings. The PAHs in the 2-3 ft sample from this boring were substantially lower, however, some compounds exceeded the Res DEC. Asphalt and coal fragments were observed in the subsurface in this area, which could account for the presence of PAHs. It is likely that this particular sample (SB-05) had a higher asphalt/coal content, which resulted in anomalously high PAHs concentrations.

Selected soil samples were also analyzed for PAHs by SPLP. SPLP benzo(a)anthracene, benzo(a)pyrene, benzo(b)fluoranthene, and/or benzo(k)fluoranthene were detected in soil samples SB-03 (0-1'), SB-05 (0-1'), and SB-09 (2-3') at concentrations above RSR criteria, i.e., the GB PMC.

VOCs

One soil sample from the upper six feet of each soil boring was submitted for analysis of VOCs based on PID readings and field observations. No elevated PID readings were encountered in soils during this investigation, and VOCs were not detected above laboratory reporting limits in any of the 11 analyzed soil samples.

ETPH

Three soil samples from the upper six feet of each soil boring and one additional sample from a deeper interval was submitted for analysis of ETPH, for a total of 34 samples. ETPH was detected in thirty one (31) soil samples at concentrations below RSR criteria, ranging from 19 to 390 ppm. Concentrations of ETPH in soil samples SB-02 (2-3'), detected at 520 mg/kg, and SB-05 (0-1'), detected at 550 mg/kg, slightly exceeded the Res DEC of 500 mg/kg.

PCBs

Three soil samples from the upper six feet from each soil boring and an additional three samples from the 8 to 9 ft interval were analyzed for PCBs. Trace concentrations of PCBs (aroclors 1260 and 1268) were detected in nine (9) soils samples at concentrations below RSR criteria (i.e., <1 ppm). The detected concentrations ranged from 0.14 to 0.79 ppm and were detected from 0 to 6 feet below grade, with the highest detection in SB-04 (2-3'). Four soil samples were also analyzed for PCBs by SPLP, and two of the four samples had concentrations of SPLP PCBs above laboratory reporting limits, but below RSR criteria, at 0.45 and 3.7 µg/l.

3.5 Comparison to 2014 Analytical Results

During the 2014 subsurface investigation, four soil samples (F2, F3, G2, and G3) were collected from the top foot of soil in the vicinity of the 2019 study area. Similar substances were detected in soils collected in the 2019 study at generally similar concentrations, with the exception of PCBs, ETPH, lead, and PAHs.

No PCBs were detected above laboratory reporting limits in the four samples collected in 2014. The 2019 results showed no PCBs exceeding the Residential Direct Exposure Criteria of 1.0 mg/kg. However, trace concentrations (< 1.0 mg/kg) of PCBs were detected in some samples.

The ETPH detections in the 2019 samples were higher in a few instances than the 2014 results. However, only two samples (SB-05 0-1' and SB-02 2-3') had ETPH over the Res DEC at 520 to 550 ppm/mg/kg. Additionally, the 2019 surficial (0 to 1') samples listed below had detections of constituents at concentrations at higher concentrations than the 2014 results:

- Total Lead: SB-03 (at 250 mg/kg)
- PAHs (based on Benzo(a)pyrene values): SB-02, SB-03, SB-05, and SB-07 (at 2,300 to 13,000 mg/kg)

During the 2014 investigation, >50 surficial (0-1') soil samples were collected across the OSI site, including the four samples noted above that were close to the proposed pathway. A statistical analysis of the PAHs data from the 0-1' interval performed at that time showed that the 95%

Upper Confidence Level (95% UCL) of individual PAH compounds detected were below the Res DEC for those compounds, which are mostly 1000 mg/kg.

For the purposes of evaluating the potential exposure risk from these PAH compounds, HRP re-calculated the 95% UCL for selected PAHs using both the 2019 and 2014 data sets. Two 95% UCL evaluations were run: 1.) Using all of the PAH data from the 2014 and the 2019 studies, and 2.) Using all 2014 and 2019 data except for sample SB-05, which had much higher concentrations of PAHs and is considered an anomaly.

The resulting values (see below) indicate that, with the exception of Benzo(a)anthracene, the 95% UCL for the detected substances are below the Res DEC for the 95% UCL run that did not include data from SB-05. The 95% UCL for Benzo(a)anthracene without the SB-05 data was 1222 mg/kg, which is slightly over the Res DEC. For the run including data from SB-05, all PAHs were below the Res DEC except for Benzo(a)anthracene (1800 mg/kg), Benzo(b)fluoranthene (2022 mg/kg), and Benzo(a)pyrene (1103 mg/kg). These substances, particularly Benzo(a)anthracene, are typically related to coal and asphalt, which was observed in the subsurface materials in the test borings. See **Appendix C** for Pro UCL output.

Summary of 95% UCL Statistical Analysis 0-1 ft. without SB-05 (0-1') (in mg/kg)

PAH Above RDEC	RDEC	95% UCL (0-1 ftbgs)	Detects/Total
Benzo(a)anthracene	1000	1222	54/78
Benzo(b)fluoranthene	1000	968.8	55/78
Indeno(1,2,3-cd)pyrene	1000	569.3	32/78
Benzo(a)pyrene	1000	985.2	58/78
Benzo(ghi)perylene	8400	571.8*	32/78
Dibenzo(a,H)anthracene	1000	245	10/78

*95% KM Approximate Gamma UCL= 524.4, 95% GROS Approximate Gamma UCL= 571.8

Summary of 95% UCL Statistical Analysis 0-1 ft. with SB-05 (0-1') (in mg/kg)

PAH Above RDEC	RDEC	95% UCL (0-1 ftbgs)	Detects/Total
Benzo(a)anthracene	1000	1810	55/79
Benzo(b)fluoranthene	1000	2022	56/79
Indeno(1,2,3-cd)pyrene	1000	591.7	33/79
Benzo(a)pyrene	1000	1103	59/79
Benzo(ghi)perylene	8400	558.3	33/79
Dibenzo(a,H)anthracene	1000	344.1	11/79

4.0 QUALITY ASSURANCE/QUALITY CONTROL

For QA/QC purposes, a VOC trip blank was submitted for analysis. No VOCs were detected above laboratory reporting limits in the trip blank. Additionally, duplicate samples, SB-100 and SB-101 were collected from SB-03 (0-1') and SB-08 (2-3'), respectively. The duplicate samples were analyzed blindly with separate sample IDs. The following tables compare the original sample results with the duplicate sample results.

SB-03 (0-1') vs. SB-100					
Analyte	Units	SB-03 (0-1') Concentration	SS-100 Concentration	Difference	Relative Percent Difference
Arsenic	ppm	5.1	6.5	1.4	24.14%
Barium	ppm	120	120	0	0%
Cadmium	ppm	1.2	1.2	0	0%
Chromium, Total	ppm	130	22	108	**142.11%**
Lead	ppm	250	250	0	0%
Mercury	ppm	0.54	0.61	0.07	12.17%
Selenium	ppm	<3.6	<3.8	NA	NA
Silver	ppm	0.88	1.1	0.22	22.22%
2-Methylnaphthalene	*ppb*	*<190*	*220*	*30*	*14.63%*
Acenaphthene	*ppb*	*<190*	*200*	*10*	*5.13%*
Acenaphthylene	ppb	310	860	550	**94.02%**
Anthracene	ppb	460	1300	840	**95.45%**
Benzo(a)anthracene	ppb	2100	4300	2200	**68.75%**
Benzo(a)pyrene	ppb	2400	5200	2800	**73.68%**
Benzo(b)fluoranthene	ppb	2800	6300	3500	**76.92%**
Benzo(ghi)perylene	ppb	1300	2100	800	47.06%
Benzo(k)fluoranthene	ppb	1100	2200	1100	**66.67%**
Chrysene	ppb	2200	4200	2000	**62.50%**
Dibenzo(a,H)anthracene	ppb	310	440	130	34.67%
Fluoranthene	ppb	4000	9600	5600	**82.35%**
Fluorene	*ppb*	*<190*	*600*	*410*	***103.80%***
Indeno(1,2,3-cd)pyrene	ppb	1700	2800	1100	48.89%
Naphthalene	*ppb*	*<190*	*360*	*170*	***61.82%***
Phenanthrene	ppb	2100	4500	2400	**72.73%**
Pyrene	ppb	3900	8900	5000	**78.13%**
VOCs	ppb	ND	ND	NA	NA
ETPH	ppm	390	370	20	5.26%
PCBs	ppm	0.38	0.46	0.08	19.05%

SB-08 (2-3') vs. SB-101					
Analyte	Units	SB-08 (2-3') Concentration	SS-101 Concentration	Difference	Relative Percent Difference
Arsenic	ppm	2.8	3.1	0.3	10.17%
Barium	ppm	48	49	1	2.06%
Cadmium	ppm	0.45	0.41	0.04	9.30%
Chromium, Total	ppm	15	14	1	6.90%
Lead	ppm	57	47	10	19.23%
Mercury	ppm	0.14	0.13	0.01	7.41%
Selenium	ppm	<3.7	<3.5	NA	NA
Silver	ppm	<0.37	<0.35	NA	NA
Acenaphthylene	*ppb*	*280*	*<370*	*90*	*27.69%*
Anthracene	*ppb*	*220*	*<370*	*150*	***50.85%***
Benzo(a)anthracene	ppb	1300	1800	500	32.26%
Benzo(a)pyrene	ppb	1500	1900	400	23.53%
Benzo(b)fluoranthene	ppb	1700	2400	700	34.15%
Benzo(ghi)perylene	ppb	1100	1300	200	16.67%
Benzo(k)fluoranthene	ppb	640	950	310	38.99%
Chrysene	ppb	1300	1700	400	26.67%
Dibenzo(a,H)anthracene	*ppb*	*220*	*<370*	*150*	***50.85%***
Fluoranthene	ppb	2400	2900	500	18.87%
Indeno(1,2,3-cd)pyrene	ppb	1400	1500	100	6.90%
Phenanthrene	ppb	1000	1300	300	26.09%
Pyrene	ppb	2900	3300	400	12.90%
CT ETPH	ppm	340	290	50	15.87%
PCBs(8082)-Total	ppm	0.29	0.214	0.076	30.16%

ND - Not detected above laboratory reporting limits
NA - Not available
Bold - RPD greater than ±50%
Italicized - The analyte was not detected above laboratory reporting limits in one of the samples. In these cases the laboratory reporting limit was used to calculate the difference and the RPD.

Relative percent difference (RPD) is defined as the difference between the initial and duplicate sampling results divided by the average of the two sampling results. In general, a RPD of less than +/-50% for soil is considered to indicate an acceptable level of consistency. The relative percent differences between the original soil sample and blind soil duplicate sample were greater than the +/-50% acceptance level for certain PAH compounds and total chromium in samples SB-03/SB-100. However, based on the presence of anthropogenic fill materials, these non-conformities are believed to be due to the heterogeneity of the samples and not the laboratory's ability to reproduce results. The elevated RPDs for two PAH compounds in SB-08/SB-101 may also be partially attributed to slightly higher laboratory reporting limits required for those samples due

to matrix interferences. Additionally, based on the purpose of this investigation (i.e., identify evidence of releases of oil or hazardous materials), these elevated RPDs do not affect the conclusions of this investigation.

Field instruments used as part of this assessment were calibrated in accordance with HRP's internal quality control procedures and laboratory certification requirements.

Typical laboratory quality assurance/quality control (QA/QC) procedures were conducted and included a laboratory blank, standard, duplicate, and spike samples. All appropriate measures were taken to ensure the proper collection and handling of samples in order to provide representative data. No significant non-conformances were listed with the exception of the following:

- Report #19G0677: Reported result is estimated. Value reported over verified calibration range. (All constituents with estimated results were re-run with a 5x dilution. The diluted results were within the verified calibration range and were used for this investigation.)
- Report #19G1237 & 19G1239: Analyte is found in the associated laboratory blank as well as in the sample. [Phenanthrene: SB-02 (2-3'), SB-03 (0-1'), SB-05 (0-1'), SB-07 (0-1'), SB-08 (2-3'), SB-09 (2-3')]

HRP reviewed laboratory reports, including the case narrative and other QA/QC documentations, and determined that the laboratory data for the submitted soil samples are considered reliable, valid, and sufficient for the purpose of this assessment.

5.0 CONCLUSIONS AND RECOMMENDATIONS

Conclusions

A Subsurface Investigation was performed at the Site for the purpose of assessing soil conditions in the vicinity of a proposed wildlife viewing platform and access pathway on the western portion of O'Sullivan's Island. Thirty six (36) soil samples were collected and analyzed to evaluate soil quality.

Constituents detected above regulatory criteria (i.e., the Residential Direct Exposure and/or the GB Pollutant Mobility Criteria) in the soil samples collected in the vicinity of the proposed wildlife viewing platform and access path up to six (6) feet below grade included: leachable (SPLP) lead, PAHs (benzo(a)anthracene, benzo(a)pyrene, benzo(b)fluoranthene, benzo(k)fluoranthene, benzo(ghi)perylene, chrysene, dibenzo(a,H)anthracene, indeno(1,2,3-cd)pyrene), and ETPH. The most prevalent substances detected were Polynuclear Aromatic Hydrocarbons (PAHs). Only trace concentrations of PCBs (at levels less than the RDEC of 1.0 mg/kg) were detected. ETPH was sporadically detected, however, all but two samples were below the RDEC. Evidence of artificial fill (fragments of asphalt, coal, brick, and glass) was observed in the upper 5 ft. of material in the study area.

The substances detected were similar to those detected in the general OSI area during previous investigations. Comparison of the data to that collected in 2014 indicates that similar substances were detected at generally similar concentrations, with the exception of certain PAH compounds that were higher in some samples in the 2019 data set. However, a statistical analysis indicates that the 95% UCL values for the PAHs detected, with the exception of Benzo(a)anthracene, are below the Res DEC. This analysis did not incorporate data from sample SB-05 (0-1'), which had notably higher concentrations of PAHs than surrounding samples. The elevated PAH concentrations in SB-05 are likely due to asphalt and coal in the sample and are considered anomalous. The 95% UCL analysis using data from SB-05 indicates that three PAH compounds are slightly to moderately above the Res DEC (Benzo(a)anthracene (1800 mg/kg), Benzo(b)fluoranthene (2022 mg/kg), and Benzo(a)pyrene).

The likely source of PAHs in soils at the Site is the coal and asphalt observed in the shallow subsurface, which is not actually exposed on the ground surface. Therefore, based on the results, it is HRP's opinion that the existing soils are not likely to pose a risk from direct exposure for the passive recreational activities anticipated to take place at the Site.

Recommendations

HRP recommends that any soils excavated from the area during construction of the proposed wildlife viewing platform and associated walkway/pathway be presumed to contain substances that are not suitable for unrestricted use on or off the Site and would require proper disposal/treatment off-Site at a permitted waste facility. During construction, surficial soil in the vicinity of SB-05 should be removed to a depth of at least 1 ft. if this material is not removed to accommodate the proposed pathway.

6.0 REFERENCES

- American Society for Testing and Materials 2013. Standard Practice for Environmental Site Assessments: Phase II Environmental Site Assessment Process: ASTM, Philadelphia, PA, ASTM E1903-11, 21 pp.

- U.S. Geological Survey, Department of the Interior, Bedrock Geological Map of Connecticut, 1985.

- Soil Survey Staff, Natural Resources Conservation Service, United States Department of Agriculture. Web Soil Survey. Available online at http://websoilsurvey.nrcs.usda.gov/.

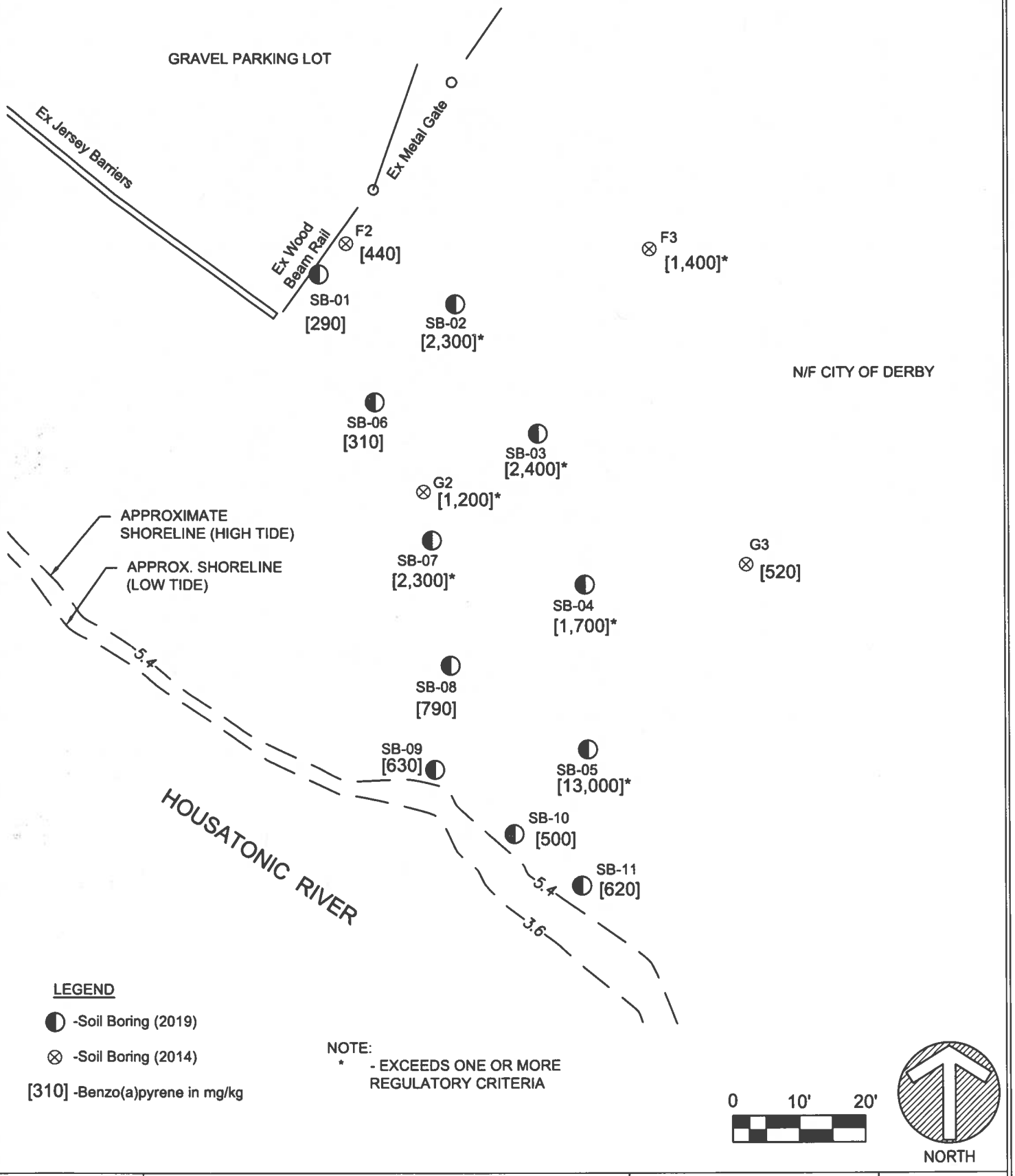

HRP
MOVE YOUR ENVIRONMENT FORWARD
197 SCOTT SWAMP ROAD
FARMINGTON, CT 06032
(860) 674-9570
HRPASSOCIATES.COM

Benzo(a)pyrene Detections in Soil (0-1 feet)

O'SULLIVAN ISLAND

DERBY, CONNECTICUT

SCALE:	1" = 20'
ISSUE DATE:	09/16/2019
PROJECT NUMBER:	NAU3005.P3

Fig. 3A

SHEET NO.

DRAWING NAME: J:\NNAUCO - NAUGATUCK VALLEY COUNCIL OF GOVERNMENTS\O'SULLIVAN ISLAND DERBY, CT\NAU3005P3\CAD\Figure 3A - Benzo-Pyrene in Soil.dwg LAYOUT: 8.5 x 11 P - SSM PLOT DATE: Sep 16, 2019 - 8:58am OPERATOR: BOB

SUPPLEMENTAL SOIL SAMPLING REPORT

MOVE YOUR ENVIRONMENT FORWARD

May 11, 2021

Mr. Kevin Vanderveer
Bureau of Water Protection and Land Reuse
Connecticut Department of Energy and Environmental Protection
79 Elm Street
Hartford, CT 06106-5127

RE: SUPPLEMENTAL SOIL SAMPLING AND ANALYSIS FOR PFAS AT PROPOSED WILDLIFE VIEWING PLATFORM AND ACCESS PATH, O'SULLIVAN ISLAND, DERBY, CONNECTICUT (HRP #NAU3005.P3)

Dear Mr. Vanderveer:

HRP Associates, Inc. (HRP) is providing this letter summarizing the results of the soil sampling and analysis for per- and polyfluoroalkyl substances (PFAS) conducted at O'Sullivan Island in Derby, Connecticut (**Figure 1**) in response to your request. On April 5, 2021, HRP personnel collected three shallow soil samples in the area of the proposed access path to the wildlife viewing platform for analysis for PFAS in surficial soils (0-1'). The soil sample locations associated with HRP's previous investigation in 2019 are depicted on **Figure 2**. The soil boring locations depicted on Figure 2 are representative of the location and approximate boundaries of the proposed access path. The soil sampling and analytical results are summarized below.

SOIL SAMPLING

On April 5, 2021, HRP collected three soil samples (SS-1 through SS-3) via hand auger along the proposed access path. The samples were collected from the upper 12 inches of soil (0-1'); the top two to three inches of grass and rooted topsoil were not included in the sample in order to provide a better representation of soils below any imported topsoil material.

The three soil samples were collected approximately 35 feet apart. The hand auger was decontaminated between each use and sample location. HRP followed sampling and decontamination protocols provided by the laboratory for PFAS sampling. These procedures were followed to limit the potential for cross-contamination from potential common sources of PFASs (clothing, personal care products, sampling equipment, personal protective equipment, etc.) that could be introduced during sampling or handling.

The soils encountered in the sampled areas consisted of brown fine-medium sand, with little silt and trace quantities of coarse sand, gravel, and roots.

The three soil samples were collected into laboratory-supplied containers and submitted to Con-Test Analytical of East Longmeadow, MA, Connecticut, a certified laboratory for analysis of PFAS using Con-Test SOP-466 PFAS. Additionally, an equipment blank (EB/Equip. Blank) and field blank

(FB/Field Blank) were collected and submitted for analysis for QA/QC purposes in order to evaluate potential for cross contamination.

ANALYTICAL RESULTS

The soil analytical results are summarized below. A summary of the soil analytical results is provided in **Table 1**. A copy of the full laboratory analytical report is included in **Attachment A**.

The results were compared to the CTDEEP Additional Polluting Substances (APS) Criteria. These include the Residential Direct Exposure Criteria (Res DEC), the Industrial/Commercial Direct Exposure Criteria (I/C DEC), and the GB Pollutant Mobility Criteria (GB PMC). The proposed APS criteria for PFAS are based on the sum of 5 target PFAS compounds as noted on the attached table.

No PFAS compounds were detected above laboratory reporting limits in any of the three samples (SS-1 through SS-3) submitted for analysis, with the exception of perfluorooctanesulfonic acid detected in soil sample SS-1 at 2 micrograms per kilogram (ug/kg). This detected concentration is less than the proposed APS criteria for the sum of the 5 target PFAS compounds.

No PFAS were detected in the equipment blank and field blank. Additionally, based on the review of the implemented QA/QC procedures, including the Laboratory Analysis QA/QC Certification Forms, case narratives, and batch QA/QC data, it is HRP's opinion that the data generated for the Site during the April 2021 sampling event are of sufficient accuracy, precision, and sensitivity to be valid and usable for its intended uses of evaluating the uppermost soil for PFAS.

SUMMARY

Supplemental soil sampling for PFAS was performed at the Site for the purpose of assessing soil conditions in the vicinity of a proposed wildlife viewing platform and access pathway on the western portion of O'Sullivan's Island. Three (3) surficial soil samples were collected and analyzed for PFAS to determine if these compounds are present.

No PFAS were detected above the laboratory reporting limits or the APS criteria, except for one PFAS compound, perfluorooctanesulfonic acid, in soil sample SS-1 at 2 ug/kg. That concentration is below the APS value for 5 target PFAS compounds. No PFAS were detected above laboratory reporting limits in soil samples SS-2 and SS-3.

If you have any questions or require additional information or if you would like to discuss this information, please contact HRP at (860) 674-9570.

Sincerely,

Melissa L. Noryk
Senior Project Geologist
Attachments

Michael R. Ainsworth, LEP
Senior Project Manager

FIGURES

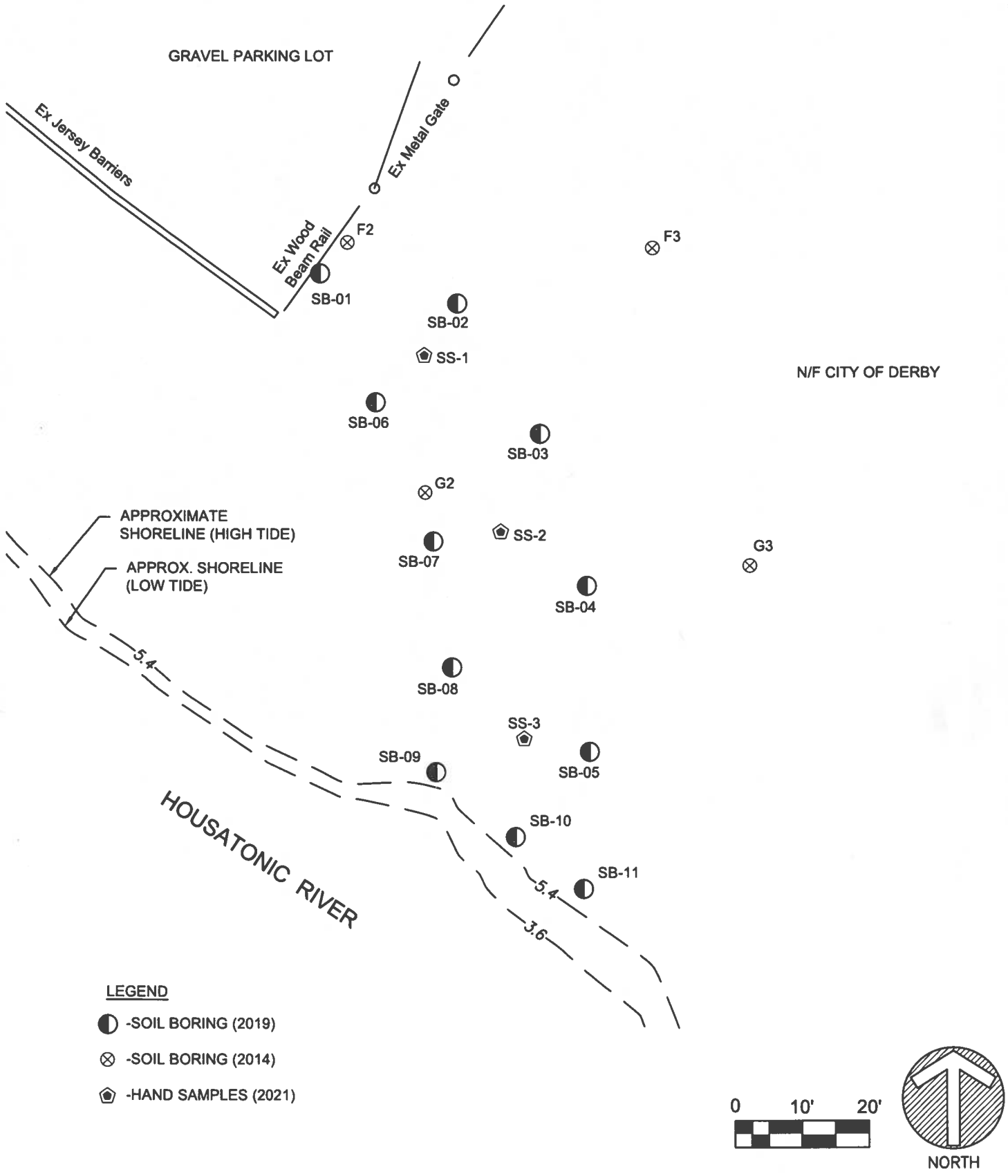

DRAWING NAME: j:\NNAUCO - NAUGATUCK VALLEY COUNCIL OF GOVERNMENTS\O'SULLIVAN ISLAND DERBY, CT\NAU3005P3\CAD\Figure 3 - Site Plan with Soil Borings and Hand Samples.dwg LAYOUT: 8.5 x 11 P - SSM PLOT DATE: May 05, 2021 - 8:13am OPERATOR: BOB

HRP
MOVE YOUR ENVIRONMENT FORWARD
197 SCOTT SWAMP ROAD
FARMINGTON, CT 06032
(860) 674-9570
HRPASSOCIATES.COM

SOIL BORING LOCATIONS

O'SULLIVAN ISLAND

DERBY, CONNECTICUT

SCALE:	1" = 20'
ISSUE DATE:	05/05/2021
PROJECT NUMBER:	NAU3005.P3

Fig. 2

SHEET NO.

PERMITS

DEPARTMENT OF THE ARMY
NEW ENGLAND DISTRICT, CORPS OF ENGINEERS
696 VIRGINIA ROAD
CONCORD, MASSACHUSETTS 01742-2751

REPLY TO
ATTENTION OF

December 17, 2021

Regulatory Division
File Number: NAE-2021-00025
CT DEEP File Number: 2020078550-SDF

City of Derby
c/o Ricardo Rodriguez
1 Elizabeth Street
Derby, Connecticut 06418
rrodriguez@nvcogct.gov

Dear Mr. Rodriguez:

We have reviewed your application to the CT Dept. of Energy & Environmental Protection, Land and Water Resources Division for the installation of a 1600 sq. ft. timber, disability accessible, fishing pier extending approximately 25-feet waterward of mean high water into the Housatonic River. The new platform will cover approximately 1,600 sq. ft. and consists of a 10' wide x 30' long ramp section beginning at the top of the shoreline embankment that extends to a 16' wide x 82' 6" main deck area in a "T" configuration. Wooden handrails will be installed along the perimeter of the entire platform and wooden benches installed in the main deck area. The entire structure will extend approximately 25-feet into the river beyond mean high water. The entire structure will include the installation of thirty 14-inch diameter pilings and seven 14-inch diameter 3-pile dolphin clusters with 3 on the south (downstream) side and 4 on the north (upstream). This project is located in the east shore of the Housatonic River O'Sullivan's Island Recreation Park, Derby, Connecticut. The work is shown on the enclosed plans titled "O'SULLIVAN'S ISLAND FISHING & VIEWING PLATFORM," on 10 sheets, dated "SEPTEMBER 2020" and revised through "MAY 2021."

Based on the information you have provided, we verify that the activity is authorized under General Permit # 4 of the enclosed December 15, 2021 Federal permit known as the Connecticut General Permits (GPs). This verification is subject to the following special conditions:

1. You must complete and return the enclosed Work Start Notification Form to this office at least two weeks before the anticipated starting date. This special condition is incorporated to notify the Corps when the project has been started so that the Corps can, if possible, schedule a site visit while work is being conducted to ensure compliance with verification terms and conditions.

2. Pile-driving and other potential sediment-producing activities must occur behind an anchored turbidity curtain as depicted on the project plan. The purpose of this condition is to minimize the effect of construction-related suspended sediment on endangered sturgeon, sturgeon critical habitat and other anadromous fish.

3. The pile-driving contractor must utilize a soft start methodology when pile-driving at the beginning of the workday or at any time following cessation of pile driving for a period of 30 minutes or longer as described below. The purpose of this condition is to provide warning for Endangered Species Act listed sturgeon so that they can leave the project area before sound pressure levels increase to potentially harmful levels.

   FOR IMPACT PILE DRIVING
   Pile driving will commence with an initial set of three strikes by the hammer at 40% energy, followed by a one-minute wait period, then two subsequent 3-strike sets at 40% energy, with one-minute waiting periods, before initiating continuous impact driving.

   FOR VIBRATORY PILE INSTALLATION
   Pile driving will be initiated for 15 seconds at reduced energy followed by a one-minute waiting period. This sequence of 15 seconds of reduced energy driving, one-minute waiting period will be repeated two additional times, followed immediately by pile-driving at full rate and energy. to reduce potential impacts.

4. No unconfined in-water work shall occur from April 1 to June 30 of any calendar year. The purpose of this condition is to protect migrating or spawning diadromous fish species.

5. You must complete and return the enclosed Compliance Certification Form within 30 days of project completion. This condition is included so that completion of the authorized work can be documented for the file and a site visit can be scheduled, as needed.

Please review the enclosed GPs and general conditions carefully to be sure that you and whoever does the work understand its requirements. A copy of the GPs and this verification letter shall be available at the project site throughout the time the work is underway. Performing work within our jurisdiction that is not specifically authorized by this determination or failing to comply with any special condition(s) provided above or all the terms and conditions of the GPs may subject you to the enforcement provisions of our regulations.

This authorization expires on December 15, 2026. You must commence or be under contract to commence the work authorized herein by December 15, 2026, and complete the work by December 15, 2027. If not, you must contact this office to determine the need for further authorization before beginning or continuing the activity. We recommend that you contact us *before* these GPs expire to discuss permit reissuance. Please contact us immediately if you change the plans or construction methods for work within our jurisdiction. We must approve any changes before you undertake them.

This authorization does not obviate the need to obtain other Federal, state, or local authorizations required by law.

We continually strive to improve our customer service. In order for us to better serve you, we would appreciate your completing our Customer Service Survey located at https://regulatory.ops.usace.army.mil/customer-service-survey/

Please contact Ms. Cori M. Rose of my staff, at (978) 318-8306 if you have any questions.

Sincerely,

Kevin R Kotelly

Kevin R. Kotelly, P.E.
Chief, Permits & Enforcement Branch
Regulatory Division

Enclosures

cc:
C. Clark, CT DEEP, Land & Water Resources Division **(**via email)
C. O'Neill, Naugatuck COG (via email)
T. Battles, HRP Associates Thomas.battles@hrpassociates.com

US Army Corps of Engineers®
New England District

WORK-START NOTIFICATION FORM

(Minimum Notice: Two weeks before work begins)

****

EMAIL TO: cori.m.rose@usace.army.mil or cenae-r-ct@usace.army.mil

MAIL TO: Cori M. Rose
Regulatory Division
U.S. Army Corps of Engineers, New England District
696 Virginia Road
Concord, Massachusetts 01742-2751

****

Corps of Engineers Permit No. NAE-2021-00025 was issued to the City of Derby c/o Ricardo Rodriguez. This work is located in the Housatonic River at O'Sullivan's Island and authorized the installation of a 1600 sq. ft. timber disability accessible fishing pier consisting of a 10' wide by 30' long ramp section beginning at the top of the shoreline embankment that extends to a 16' wide by 82' 6" main deck area in a "T" configuration and associated installation of thirty 14-inch diameter pilings and seven 14-inch diameter 3-pile dolphin clusters.

The people (e.g., contractor) listed below will do the work, and they understand the permit's conditions and limitations.

PLEASE PRINT OR TYPE

Name of Person/Firm: _____

Business Address: _____

_____

_____

Phone & email: (___) _____ (___) _____ _____

Proposed Work Dates: **Start:** _____ **Finish:** _____

Permittee/Agent Signature: _____ **Date:** _____

Printed Name: _____ **Title:** _____

Date Permit Issued: 12/17/2021 **Date Permit Expires:** 12/15/2026

****

FOR USE BY THE CORPS OF ENGINEERS

PM: Rose **Submittals Required:** No

Inspection Recommendation: Post-Construct

US Army Corps of Engineers®
New England District

COMPLIANCE CERTIFICATION FORM

(Minimum Notice: Permittee must sign and return notification within one month of the completion of work.)

Permit Number: NAE-2021-00025

Project Manager: Cori M. Rose

Name of Permittee: City of Derby c/o Ricardo Rodriguez

Permit Issuance Date: December 17, 2021

Please sign this certification and return it to our office upon completion of the activity and any mitigation required by the permit. You must submit this after the mitigation is complete, but not the mitigation monitoring, which requires separate submittals.

E-MAIL TO:	cenae-r-ct@usace.army.mil; or cori.m.rose@usace.army.mil
MAIL TO:	Permits and Enforcement Branch B
	U.S. Army Corps of Engineers, New England District
	Regulatory Division
	696 Virginia Road
	Concord, Massachusetts 01742-2751

Please note that your permitted activity is subject to a compliance inspection by an U.S. Army Corps of Engineers representative. If you fail to comply with this permit you are subject to permit suspension, modification, or revocation.

I hereby certify that the work authorized by the above referenced permit was completed in accordance with the terms and conditions of the above referenced permit, and any required mitigation was completed in accordance with the permit conditions.

_____ _____

Signature of Permittee Date

_____ _____

Printed Name Date of Work Completion

( ) _____ ( ) _____

Telephone Number Telephone Number

APPENDIX B - GENERAL CONDITIONS

1. Other Permits. Authorizations provided by these GPs do not obviate the need for project proponents to obtain other Federal, State, or local permits, approvals, or authorizations required by law. Applicants are responsible for applying and obtaining all such permits, approvals or authorizations. Work that is not regulated by the State, but subject to USACE jurisdiction, may be still be eligible for these GPs.

2. Federal Jurisdiction

a. Applicability of these GPs shall be evaluated with reference to federal jurisdictional boundaries (e.g., mean high water mark (MWH), high tide line (HTL), ordinary high water mark (OHW), and wetland boundary). Activities shall be evaluated with reference to "waters of the U.S." under the Clean Water Act (33 CFR 328) and "navigable waters of the U.S." under Section 10 of the Rivers and Harbors Act of 1899 (33 CFR 329). Prospective permittees are responsible for ensuring that the boundaries satisfy the federal criteria defined at 33 CFR 328 – 329. These sections prescribe the policy, practice, and procedures to be used in determining the extent of USACE jurisdiction.

b. Permittees shall identify the following aquatic resources on project plans: wetlands and other special aquatic sites (SAS) including vegetated shallows (also known as submerged aquatic vegetation (SAV)), riffle and pool complexes, sanctuaries and refuges, coral reefs, and mudflats; and other waters such as lakes and ponds; and perennial and intermittent streams on the project site. Wetlands shall be delineated in accordance with the Corps of Engineers Wetlands Delineation Manual and its applicable regional supplement.

3. Mitigation (Avoidance, Minimization, and Compensatory Mitigation)

a. Activities shall be designed and constructed to avoid and minimize adverse effects, both temporary and permanent, to waters of the U.S. to the maximum extent practicable at the project site (i.e., on site). Consideration of mitigation (avoiding, minimizing, rectifying, reducing, or compensating) is required to the extent necessary to ensure that the adverse effects to the aquatic environment are no more than minimal.

b. Applicants should consider riparian/forested buffers for stormwater management and low impact development (LID) best management practices (BMPs) to reduce impervious cover and manage stormwater to minimize impacts to the maximum extent practicable.

c. Compensatory mitigation[1] for unavoidable impacts to waters of the U.S., including direct, secondary and temporal[2], will generally be required for projects with permanent impacts that exceed the SV area limits, and may be required for temporary impacts that exceed the SV area limits, to offset unavoidable impacts which remain after all appropriate and practicable avoidance and minimization has been achieved and to ensure that the adverse effects to the aquatic environment are no more than minimal. Proactive restoration projects or temporary impact work with no secondary effects may generally be excluded from this requirement.

Note: The USACE Connecticut In-Lieu Fee Program allows USACE permittees, as compensation for their project impacts to aquatic resources of the U.S. in Connecticut to make monetary payment *in-lieu* of permittee-responsible mitigation. Information is provided at https://www.nae.usace.army.mil/Missions/Regulatory/Mitigation/In-Lieu-Fee Programs/CT/. This only applies to USACE required mitigation and additional CT DEEP mitigation may be required.

4. Discretionary Authority. Notwithstanding compliance with the terms and conditions of this permit, USACE retains discretionary authority to require an Individual Permit review based on concerns for the aquatic environment or for any other factor of the public interest [33 CFR 320.4(a)]. This authority is invoked on a case-by-case basis whenever USACE determines that the potential consequences of the proposal warrant Individual Permit review based on the concerns stated above. This authority may be invoked for projects with cumulative adverse environmental effects that are more than minimal, or if there is a special resource or concern

[1] Compensatory mitigation sites proposed to offset losses of aquatic resource function must comply with the applicable provisions of 33 CFR 332. See also the New England District Compensatory Mitigation Standard Operating Procedures at http://www.nae.usace.army.mil/Missions/Regulatory/Mitigation.aspx

[2] Temporal loss: The time lag between the losses of aquatic resource functions caused by the permitted impacts and the replacement of aquatic resource functions at the compensatory mitigation site(s) (33 CFR 332.2).

associated with a particular project. Whenever USACE notifies an applicant that an Individual Permit may be required, authorization under these GPs is voided and no work may be conducted in waters of the U.S. until a USACE Individual Permit is obtained or until USACE notifies the applicant that further review has demonstrated that the work may be reviewed under these GPs.

5. Fills Within 100-Year Floodplains. The activity shall comply with applicable Federal Emergency Management Agency (FEMA)-approved State of Connecticut or local floodplain management requirements. Permittees should contact FEMA and/or the State of Connecticut regarding floodplain management requirements.

6. Single and Complete Projects. The term "single and complete project" is defined at 33 CFR 330.2(i) as the total project proposed or accomplished by one owner/developer or partnership or other association of owners/developers. The GPs shall not be used for piecemeal work and shall be applied to single and complete projects.

a. For non-linear projects, a single and complete project must have independent utility. Portions of a multi-phase project that depend upon other phases of the project do not have independent utility. Phases of a project that would be constructed, even if the other phases were not built, can be considered as separate single and complete projects with independent utility.

b. Unless USACE determines the activity has independent utility, all components of a single project and/or all planned phases of a multi-phased project (e.g., subdivisions should include all work such as roads, utilities, and lot development) shall be treated together as constituting one single and complete project.

c. For linear projects such as power lines or pipelines with multiple crossings, a "single and complete project" is all crossings of a single water of the U.S. (i.e., single waterbody) at a specific location. For linear projects crossing a single waterbody several times at separate and distant locations, each crossing is considered a single and complete project. However, individual channels in a braided stream or river, or individual arms of a large, irregularly shaped wetland or lake, etc., are not separate waterbodies, and crossings of such features cannot be considered separately. If any crossing requires a PCN review or an individual permit review, then the entire linear project shall be reviewed as one project under PCN or the individual permit procedures.

7. Use of Multiple General Permits. The use of more than one GP for a single and complete project is prohibited, except when the acreage loss of waters of the U.S. authorized by the GPs does not exceed the acreage limit of the GPs with the highest specified acreage limit. For example, if a road crossing over waters is constructed under GP 19, with an associated utility line crossing authorized by GP 6, if the maximum acreage loss of waters of the U.S. for the total project is ≥1 acre it shall be evaluated as an IP.

8. USACE Property and Federal Projects

a. USACE projects and property can be found at: www.nae.usace.army.mil/Missions/Civil-Works

b. In addition to any authorization under these GPs, proponents must contact the USACE Real Estate Division at (978) 318-8585 for work occurring on or potentially affecting USACE properties and/or USACE-controlled easements to initiate reviews and determine what real estate instruments are necessary to perform work. Permittees may not commence work on USACE properties and/or USACE-controlled easements until they have received any required USACE real estate documents evidencing site-specific permission to work.

c. Any proposed temporary or permanent modification or use of a Federal project (including but not limited to a levee, dike, floodwall, channel, anchorage, seawall, bulkhead, jetty, wharf, pier or other work built but not necessarily owned by the United States), or any use which would obstruct or impair the usefulness of the Federal project in any manner, and/or would involve changes to the authorized Federal project's scope, purpose, and/or functioning, is not eligible for SV and will also require review and approval by USACE pursuant to Section 14 of the Rivers and Harbors Act of 1899 (33 USC 408) (Section 408)

d. A PCN is required for all work in, over, under, or within a distance of three times the authorized depth of a USACE Federal Navigation Project (FNP) and may also require permission under Section 408.

e. Any structure or work that extends closer than a distance of three times the project's authorized depth to the horizontal limits of any FNP shall be subject to removal at the owner's expense prior to any future USACE dredging or the performance of periodic hydrographic surveys.

f. Where a Section 408 permission is required, written verification for the PCN will not be issued prior to the decision on the Section 408 permission request.

9. National Lands. Activities that impinge upon the value of any National Wildlife Refuge, National Forest, National Marine Sanctuary, or any area administered by the National Park Service, U.S. Fish and Wildlife Service (USFWS) or U.S. Forest Service are not eligible for SV and require either a PCN or Individual Permit.

10. Wild and Scenic Rivers

a. The following activities in designated rivers of the National Wild and Scenic River (WSR) System, or in a river designated by Congress as a "study river" for possible inclusion in the system, require a PCN or IP unless the National Park Service (NPS) has determined in writing to the proponent that the proposed work will not adversely affect the WSR designation or study status:

(1) Activities that occur in WSR segments, in and 0.25 mile up or downstream of WSR segments, or in tributaries within 0.25 miles of WSR segments;

(2) Activities that occur in wetlands within 0.25 mile of WSR segments; or

(3) Activities that have the potential to alter free-flowing characteristics in WSR segments. The District Engineer will coordinate the application with the NPS or its designee with direct management responsibility for that river.

b. Information on Wild and Scenic Rivers may be obtained from the appropriate Federal land management agency responsible for the designated Wild and Scenic River or study river (e.g., National Park Service, U.S. Forest Service, Bureau of Land Management, U.S. Fish and Wildlife Service).

c. As of 2021, designated rivers in Connecticut include: the West Branch of the Farmington River from Colebrook to Canton (designated river); the Eightmile River and tributaries in Salem, Lyme, and East Haddam (designated river); the Lower Farmington River from Canton to Windsor (study river – including its tributary Salmon Brook) and the Wood & Pawcatuck Rivers. Additional information can be found at: http://www.rivers.gov/connecticut.php.

11. Historic Properties

a. No undertaking shall cause effects (defined at 33 CFR 325 Appendix C and 36 CFR 800) to properties listed on, determined to be eligible for listing on, or potentially eligible for listing on the National Register of Historic Places[3], including previously unknown historic properties within the permit area, unless USACE or another Federal action agency has satisfied the consultation requirements of Section 106 of the National Historic Preservation Act (NHPA). The State Historic Preservation Officer (SHPO), Tribal Historic Preservation Officer (THPO) and the National Register of Historic Places can assist with locating information on:

(1) Previously identified historic properties; and

(2) Areas with potential for the presence of historic or cultural resources, which may require identification and evaluation by qualified historic preservation and/or archaeological consultants or tribal entities in consultation with USACE and the SHPO and/or THPO(s).

b. For activities eligible for SV, proponents must document that the activity will not cause effects as stated in 11(a). To comply with this condition, both SV and PCN prospective permittees shall notify the CT SHPO and THPOs for projects in close proximity to tribal lands or with potential impacts to tribal lands and request their identification of historic properties and cultural resources. The notification shall consist of the project location, plans, and brief narrative and state that a federal permit is required. Documentation of the notification to the SHPO/THPO shall be included with the SV or PCN submittal and dated. If no response is received within 30-days from the SHPO/THPO notification, the Corps may proceed to a permit decision on an SV or PCN. A PCN or IP is required if any activity may have an adverse effect on a historic property or cultural resource.

[3] Many historic properties are not listed on the National Register of Historic Places and may require identification and evaluation by qualified historic preservation and/or archaeological consultants in consultation with USACE and the SHPO and/or THPO(s).

c. Proponents must submit a PCN to USACE as soon as possible if the authorized activity may cause effects as stated in 11(a) to ensure that USACE is aware of any potential effects of the permitted activity on any historic property or cultural resource so that the consultation requirements of Section 106 of NHPA can be satisfied.

d. All PCN (inland projects) submittals shall:

1) show notification to the SHPO and applicable THPO(s) for their identification of historic properties or cultural resources (https://portal.ct.gov/-/media/DECD/Historic-Preservation/01_Programs_Services/Environmental-Review/ProjectNotificationForm_2021.pdf). If no response is received within 30-days from the SHPO/THPO notification, the Corps may proceed to a permit decision on an SV or PCN.

2) state which historic properties or cultural resources may be affected by the proposed work or include a vicinity map indicating the location of them, and

3) include any available documentation from the SHPO or THPO(s) indicating that there are, or are not, historic properties or cultural resources affected. Starting consultation early in project planning can save proponents time and money.

e. If you discover any previously unknown historic, cultural, or archeological remains and artifacts while accomplishing the activity authorized by this permit, you must immediately notify the district engineer of what you have found, and to the maximum extent practicable, avoid construction activities that may affect the remains and artifacts until the required coordination has been completed. The district engineer will initiate the Federal, Tribal, and state coordination required to determine if the items or remains warrant a recovery effort or if the site is eligible for listing in the National Register of Historic Places.

f. Federal agencies should follow their own procedures for complying with the requirements of Section 106 of the NHPA. Along with the application, Federal permittees shall provide USACE with the appropriate documentation to demonstrate compliance with those requirements.

g. Federal and non-federal applicants should coordinate with USACE before conducting any onsite archeological work (reconnaissance, surveys, recovery, etc.) requested by the SHPO or the THPOs, as USACE will determine the permit area for the consideration of historic properties based on 33 CFR 325 Appendix C. This is to ensure that work done is in accordance with USACE requirements.

12. Federal Threatened and Endangered Species

a. No activity is authorized by these GPs which:

(1) Is likely to directly or indirectly jeopardize the continued existence of a threatened or endangered species or a species proposed for such designation, as identified under the Federal Endangered Species Act (ESA), or which will directly or indirectly destroy or adversely modify the critical habitat or proposed critical habitat of such species.

(2) "May affect" a listed species or critical habitat, unless Section 7 consultation addressing the effects of the proposed activity has been completed.

(3) Is "likely to adversely affect" a listed species or critical habitat unless Section 7 consultation has been completed by USACE or another lead action agency in coordination with USACE.

(4) Violates the ESA.

b. All prospective permittees shall attach to their SVNF or PCN an Official Species List obtained from the U.S. Fish and Wildlife Service's Information for Planning and Consultation (IPaC) found at: *https://ecos.fws.gov/ipac* and provide the email address of the person who generated the list.

c. For proposed activities in waters with tidal influence, prospective permittees shall also refer to the National Oceanic and Atmospheric Administration (NOAA) Fisheries' Section 7 Mapper for federally-listed species found at: *https://noaa.maps.arcgis.com/apps/webappviewer/index.html.*

Several tidal freshwater waterways in Connecticut have been identified as foraging and overwintering areas, or designated as critical habitat, for the endangered Atlantic sturgeon and shortnose sturgeon. The extent of these waterways is highlighted below. The list of waters below does not include higher salinity coastal tidal creeks and brackish waterways which also possess habitat for these species, so it is strongly recommended that applicants refer to the NOAA Section 7 mapper (link above) for all work in waterways that may have tidal influence:

- Mainstem Housatonic River from Long Island Sound (LIS) to the upstream limit of the Derby Dam in Shelton, CT (Atlantic sturgeon critical habitat; migrating and foraging habitat for Atlantic sturgeon and shortnose sturgeon).
  - Naugatuck River confluence with the Housatonic River up to the Naugatuck River Reservoir dam in Ansonia, CT.
- Quinnipiac River from LIS to the bridge/intersection of Quinnipiac Street and River Road, Wallingford, CT (migrating and foraging habitat for Atlantic sturgeon and shortnose sturgeon).
- Mainstem Connecticut River from LIS to the Massachusetts Border (Atlantic sturgeon critical habitat; spawning, migrating, and foraging for Atlantic sturgeon; overwintering, migrating, and foraging for shortnose sturgeon).
  - Salmon River confluence at Connecticut River to the dam at Powerhouse Road, Leesville, CT
  - Farmington River confluence with the Connecticut River to Tunxis Road, Tariffville, CT
  - Pattaconk Brook confluence with the Connecticut River to North Quarter Park, Chester, CT
  - Confluence of Hamburg Cove with the Connecticut River to Eightmile River at Joshuatown Road/Old Hamburg Road, Hamburg, CT.
  - Lord Creek confluence with the Connecticut River to Coults Hole and Mack Creek to Lord Hill Lane, Lyme, CT.
  - North Cove confluence with Connecticut River and Falls River confluence in North Cove to River Road, Essex, CT.
  - Mattabassett River confluence at the Connecticut River to Rt. 3, northeast of Newfield Street in Middletown, CT.
  - Coginchaug River confluence with the Mattabassett River to Johnson Street north of the Providence & Worcester Railroad.
  - Selden Creek, Lyme, CT.
- Mainstem of the Thames River to Norwich, Connecticut (migrating and foraging habitat for Atlantic sturgeon and shortnose sturgeon).
  - Shetucket River confluence with Thames River up to Greenville Dam, Greenville, CT
  - Yantic River confluence with the Thames River to Yantic Falls, Norwich, CT.
  - Horton Cove confluence with the Thames River to Stony Brook and Mohegan Brook, Montville, CT.
  - Poquetanuck Cove confluence with the Thames River to Poquetanuck Brook at Shingle Road, Poquetanuck, CT.

d. A PCN is required if a threatened or endangered species, a species proposed for listing as threatened or endangered, or designated or proposed critical habitat (all hereinafter referred to as "listed species or habitat"), as identified under the ESA, may be affected by the proposed work, unless consultation is completed by another lead Federal agency, in which case, an application can be SV. An activity may remain eligible for SV if the only listed species affected is the northern long-eared bat (*Myotis septrionalis*), and only after Section 7 consultation has been completed by USACE under the 4(d) Rule Streamlined Consultation.

e. Federal agencies shall follow their own procedures for complying with the requirements of the ESA while ensuring that USACE and any other federal action agencies are included in the consultation process.

f. Non-federal representatives designated by USACE to conduct informal consultation or prepare a biological assessment shall follow the requirements in the designation document(s) and the ESA. Non-federal representatives shall also provide USACE with the appropriate documentation to demonstrate compliance with those requirements. The USACE will review the documentation and determine whether it is sufficient to address ESA compliance for the GP activity, or whether additional ESA consultation is necessary.

g. The requirements to comply with Section 7 of the ESA may be satisfied by a programmatic agreement (PA) or programmatic consultation (PC) with USACE, the New England District, or another federal agency. New England District PAs and PCs are found at: https://www.nae.usace.army. mil/Missions/Regulatory/State-General-Permits/Connecticut-General-Permit.

13. Pile Installation and Removal and Related Time of Year Restrictions

a. Derelict, degraded, or abandoned piles and sheet piles in the project area shall be removed in their entirety as practicable and properly disposed of in an upland location and not in wetlands or other waters of the U.S. In areas of fine-grained substrates, piles/sheets shall be removed by direct, vibratory, or clamshell pull method to minimize potential turbidity and sedimentation impacts. If removal is not practicable, said piles/sheets shall be cut off or driven to a depth of, at least, one foot below substrate.

b. Work involving pile installation and/or removal should occur "In-the-dry" or adhere to the applicable waterbody's time-of-year restrictions in Appendix H.

14. Navigation

a. No activity may cause more than a minimal adverse effect on navigation.

b. Any safety lights and signals prescribed by the U.S. Coast Guard, through regulations or otherwise, must be installed and maintained at the permittee's expense on authorized facilities in navigable waters of the U.S.

c. Any structure or work that extends closer to the horizontal limits of any USACE FNP than a distance of three times the project's authorized depth shall be subject to removal at the owner's expense prior to any future USACE dredging or the performance of periodic hydrographic surveys. This is applicable to SV and PCN.

d. There shall be no unreasonable interference with navigation by the existence or use of the activity authorized herein, and no attempt shall be made by the permittee to prevent the full and free use by the public of all navigable waters at or adjacent to the activity authorized herein.

e. The permittee understands and agrees that if future U.S. operations require the removal, relocation, or other alteration of the structure or work herein authorized, or if, in the opinion of the Secretary of the Army or his authorized representative, said structure or work shall cause unreasonable obstruction to the free navigation of the navigable waters, the permittee will be required, upon due notice from USACE, to remove, relocate, or alter the structural work or obstructions caused thereby, without expense to the U.S. No claim shall be made against the U.S. on account of any such removal or alteration.

f. A PCN is required for all work in, over or under an FNP or its buffer zone unless otherwise indicated in Appendix A. as the work may also require a Section 408 permit.

15. Federal Liability. In issuing these permits, the Federal Government does not assume any liability for the following: (a) damages to the permitted project or uses thereof as a result of other permitted or unpermitted activities or from natural causes; (b) damages to the permitted project or uses thereof as a result of current or future activities undertaken by or on behalf of the U.S. in the public interest; (c) damages to persons, property, or to other permitted or unpermitted activities or structures caused by the activity authorized by this permit; (d) design or construction deficiencies associated with the permitted work; and/or (e) damage claims associated with any future modification, suspension, or revocation of these permits.

16. Heavy Equipment in Wetlands. Operating heavy equipment other than fixed equipment (drill rigs, fixed cranes, etc.) within wetlands shall be minimized, and such equipment shall not be stored, maintained, or repaired in wetlands, to the maximum extent practicable. Where construction requires heavy equipment operation in wetlands, the equipment shall either have low ground pressure (typically <3 psi), or it shall be placed on swamp/construction/timber mats (herein referred to as "construction mats") that are adequate to support the equipment in such a way as to minimize disturbance of wetland soil and vegetation. Construction mats are to be placed in the wetland from the upland or from equipment positioned on construction mats if working within a wetland. Dragging construction mats into position is prohibited. Other support structures that are capable of safely supporting equipment may be used with written USACE authorization. Similarly, the permittee may request written authorization from USACE to waive use of mats during frozen or dry conditions. An adequate supply of spill containment equipment shall be maintained on site. Construction mats should be managed in accordance with the following construction mat BMPs:

- Mats should be in good condition to ensure proper installation, use and removal.

- Where feasible, mats should be carried and not dragged unless they are being used as a grading implement.
- Where feasible, place mats in a location that would minimize the amount needed for the wetlands crossing.
- Minimize impacts to wetland areas during installation, use, and removal.
- Install adequate erosion & sediment controls at approaches to mats to promote a smooth transition to, and minimize sediment tracking onto, swamp mats.
- In most cases, construction mats should be placed along the travel area so that the individual boards are resting perpendicular to the direction of traffic. No gaps should exist between mats. Place mats far enough on either side of the resource area to rest on firm ground.
- Provide standard construction mat BMP details to work crews.
- Construction mats shall be thoroughly cleaned before re-use to minimize spread of invasive species.

17. Temporary Fill

a. Temporary fill, including but not limited to construction mats and corduroy roads shall be entirely removed as soon as they are no longer needed to construct the authorized work. Temporary fill shall be placed in its original location or disposed of at an upland site and suitably contained to prevent its subsequent erosion into waters of the U.S.

b. All temporary fill and disturbed soils shall be stabilized to prevent its eroding into waters of the U.S. where it is not authorized. Work shall include phased or staged development to ensure only areas under active development are exposed and to allow for stabilization practices as soon as practicable. Temporary fill must be placed in a manner that will prevent it from being eroded by expected flows.

c. Unconfined temporary fill authorized for discharge into waters of the U.S. shall consist of material that minimizes impacts to water quality (e.g., washed stone, stone, etc.).

d. Appropriate measures must be taken to maintain normal downstream flows and minimize flooding to the maximum extent practicable when temporary structures, work, and discharges of dredged or fill material, including cofferdams, are necessary for construction activities, access fills, or dewatering of construction sites. Materials shall be placed in a location and manner that does not adversely impact surface or subsurface water flow into or out of the wetland. Temporary fill authorized for discharge into wetlands shall be placed on geotextile fabric or other appropriate material laid on the pre-construction wetland grade where practicable to minimize impacts and to facilitate restoration to the original grade. Construction mats are excluded from this requirement.

e. Construction debris and/or deteriorated materials shall not be located in waters of the U.S.

18. Restoration of Inland Wetland Areas

a. Upon completion of construction, all disturbed wetland areas (the disturbance of these areas must be authorized) shall be stabilized with a wetland seed mix containing only plant species native to New England and shall not contain any species listed in the "Invasive and Other Unacceptable Plant Species" Appendix D in the "New England District Compensatory Mitigation Guidance" found at http://www.nae.usace.army.mil/Portals/74/docs/regulatory/Mitigation/CompensatoryMitigationGuidance.pdf.

b. The introduction or spread of invasive plant species in disturbed areas shall be controlled. If swamp or timber mats are to be used, they shall be thoroughly cleaned before re-use.

c. In areas of authorized temporary disturbance, if trees are cut, they shall be cut at or above ground level and not uprooted to prevent disruption to the wetland soil structure and to allow stump sprouts to revegetate the work area, unless otherwise authorized.

d. Wetland areas where permanent disturbance is not authorized shall be restored to their original condition and elevation, which under no circumstances shall be higher than the pre-construction elevation. Original condition means careful protection and/or removal of existing soil and vegetation, and replacement back to the original location such that the original soil layering, and vegetation schemes are approximately the same, unless otherwise authorized.

19. Coastal Bank Stabilization. Projects involving construction or reconstruction/maintenance of bank stabilization structures within USACE jurisdiction should be designed to minimize environmental effects, effects to neighboring properties, scour, etc. to the maximum extent practicable. For example, vertical bulkheads should only be used in situations where reflected wave energy can be tolerated. This generally eliminates bodies of water where the reflected wave energy may interfere with or impact harbors, marinas, or other developed shore areas. A revetment is sloped and is typically employed to absorb the direct impact of waves more effectively than a vertical seawall. For more information, go to the USACE Coastal Engineering Manual (supersedes the Shore Protection Manual) located at https://www.nae.usace.army.mil/Missions/Regulatory/Useful-Documents-Forms-and-Publications/. Select "Products/ Services," "Publications." Part 5, Chapter 7-8, a (2) c.

20. Soil Erosion and Sediment Controls. Appropriate soil erosion and sediment controls must be used and maintained in effective operating condition during construction, and all exposed soil and other fills, as well as any work below OHW or HTL, must be permanently stabilized at the earliest practicable date. Permittees are encouraged to perform work within waters of the U.S. during periods of low-flow or no-flow, or during low tides.

21. Aquatic Life Movements & Management of Water Flows

a. No activity may substantially disrupt the necessary life cycle movements of those species of aquatic life indigenous to the waterbody, including those species that normally migrate through the area, unless the activity's primary purpose is to impound water. Unless otherwise stated, activities impounding water in a stream require a PCN to ensure impacts to aquatic life species are avoided and minimized. All permanent and temporary crossings of waterbodies (e.g., streams, wetlands) shall be:

(1) Suitably culverted, bridged, or otherwise designed and constructed to maintain low flows to sustain the movement of those aquatic species; and

(2) Properly aligned and constructed to prevent bank erosion or streambed scour both adjacent to and inside the culvert. Permanent and temporary crossings of wetlands shall be suitably culverted, spanned or bridged in such a manner as to preserve hydraulic and ecological connectivity between the wetlands on either side of the road.

b. To avoid adverse impacts on aquatic organisms, the low flow channel/thalweg shall remain unobstructed during periods of low flow, except when it is necessary to perform the authorized work.

c. To the maximum extent practicable, the pre-construction course, condition, capacity, and location of open waters must be maintained for each activity, including stream channelization and storm water management activities. The activity must be constructed to withstand expected high flows. The activity must not restrict or impede the passage of normal or high flows unless the primary purpose of the activity is to impound water or manage high flows. The activity may alter the preconstruction course, condition, capacity, and location of open waters if it benefits the aquatic environment (e.g., stream restoration or relocation activities).

d. Refer to Appendix G for Stream Crossing BMPs.

22. Discharge of Pollutants. All activities involving any discharge of pollutants into waters of the U.S. authorized under these GPs shall be consistent with applicable water quality standards, effluent limitations, standards of performance, prohibitions, and pretreatment standards and management practices established pursuant to the CWA (33 U.S.C. 1251), and applicable state and local laws. If applicable water quality standards, limitations, etc., are revised or modified during the term of this permit, the authorized work shall be modified to conform with these standards within six months of the effective date of such revision or modification, or within a longer period deemed reasonable by the District Engineer in consultation with the Regional Administrator of the EPA. Applicants may presume that state water quality standards are met with issuance of the Section 401 WQC (applicable only to the Section 404 activity).

23. Spawning, Breeding, and Migratory Areas

a. Jurisdictional activities and impacts such as excavations, discharges of dredged or fill material, and/or suspended sediment producing activities in jurisdictional waters that provide value as fish migratory areas, fish and shellfish spawning or nursery areas, or amphibian and migratory bird breeding areas, during spawning or breeding seasons shall be avoided and minimized to the maximum extent practicable.

b. Jurisdictional activities in waters of the U.S. that provide value as breeding areas for migratory birds must be avoided to the maximum extent practicable. The permittee is responsible for obtaining any "take" permits required under the USFWS's regulations governing compliance with the Migratory Bird Treaty Act or the Bald and Golden Eagle Protection Act. The permittee should contact the appropriate local office of the USFWS to determine if such "take" permits are required for a particular activity.

24. Storage of Seasonal Structures. Coastal structures, such as pier sections and floats, that are removed from the waterway for a portion of the year (often referred to as seasonal structures) shall be stored in an upland location, located above MHW and not in tidal wetlands. These seasonal structures may be stored on the fixed, pile-supported portion of the structure that is seaward of MHW. This is intended to prevent structures from being stored on the marsh substrate and the substrate seaward of MHW.

25. Environmental Functions and Values. The permittee shall make every reasonable effort to carry out the construction or operation of the work authorized herein in a manner that minimizes any adverse impacts on existing fish, wildlife, and the environmental functions to the extent practicable. The permittee will discourage the establishment or spread of plant species identified as non-native invasive species by any federal or state agency.

26. Vernal Pools.

a. A PCN is required if a discharge of dredged or fill material is proposed within a vernal pool depression located within waters of the U.S.

b. GC 26(a) above does not apply to projects that are within a municipality that meets the provisions of a USACE-approved vernal pool Special Area Management Plan (SAMP) and are otherwise eligible for SV, and the applicant meets the requirements to utilize the vernal pool SAMP.

27. Invasive Species

a. The introduction, spread, or the increased risk of invasion of invasive plant or animal species on the project site, into new or disturbed areas, or areas adjacent to the project site caused by the site work shall be avoided. Hence, swamp and timber mats shall be thoroughly cleaned before reuse.

b. Unless otherwise directed by USACE, all applications for PCN inland projects proposing fill in USACE jurisdiction shall include an Invasive Species Control Plan. Additional information can be found at www.nae.usace.army.mil/missions/regulatory/invasive-species and https://cipwg.uconn.edu/

28. Permit/Authorization Letter On-Site. For PCN projects, the permittee shall ensure that a copy of these GPs and the accompanying authorization letter are at the work site (and the project office) whenever work is being performed, and that all personnel with operational control of the site ensure that all appropriate personnel performing work are fully aware of its terms and conditions. The entire permit authorization shall be made a part of all contracts and sub-contracts for work that affects areas of USACE jurisdiction at the site of the work authorized by these GPs. This shall be achieved by including the entire permit authorization in the specifications for work. The term "entire permit authorization" means these GPs, including GCs and the authorization letter (including its drawings, plans, appendices, and other attachments) and includes permit modifications. If the authorization letter is issued after the construction specifications, but before receipt of bids or quotes, the entire permit authorization shall be included as an addendum to the specifications. If the authorization letter is issued after receipt of bids or quotes, the entire permit authorization shall be included in the contract or sub-contract as a change order. Although the permittee may assign various aspects of the work to different contractors or sub-contractors, all contractors and sub-contractors shall be obligated by contract to comply with all environmental protection provisions contained within the entire authorization letter, and no contract or sub-contract shall require or allow unauthorized work in areas of USACE jurisdiction.

29. Inspections. The permittee shall allow USACE to make periodic inspections at any time deemed necessary to ensure that the work is being or has been performed in accordance with the terms and conditions of this permit. To facilitate these inspections, the permittee shall complete and return to USACE the Work-Start Notification Form and the Compliance Certification Form when either is provided with a verification letter. The USACE may also require post-construction engineering drawings for completed work or post-dredging survey

drawings for any dredging work.

30. Maintenance. The permittee shall maintain the activity authorized by these GPs in good condition and in conformance with the terms and conditions of this permit. This does not include maintenance dredging projects. Maintenance dredging is subject to the review thresholds in Appendix A – General Permit #7 as well as any conditions included in a written USACE authorization. Maintenance dredging includes only those areas and depths previously authorized and dredged. Some maintenance activities may not be subject to regulation under Section 404 in accordance with 33 CFR 323.4(a)(2).

31. Property Rights. Per 33 CFR 320.4(g)(6), these GPs do not convey any property rights, either in real estate or material, or any exclusive privileges, nor does it authorize any injury to property or invasion of rights or any infringement of federal, state, or local laws or regulations.

32. **Transfer of GP Verifications.** If the permittee sells the property associated with a GP verification, the permittee may transfer the GP verification to the new owner by submitting a letter to this office to validate the transfer. A copy of the GP verification must be attached to the letter, and the letter must contain the following statement and signature:

When the structures or work authorized by this general permit are still in existence at the time the property is transferred, the terms and conditions of this general permit, including any special conditions, will continue to be binding on the new owner(s) of the property. To validate the transfer of this general permit and the associated liabilities associated with compliance with its terms and conditions, have the transferee sign and date below.

_____(Transferee)
_____(Date)

33. Modification, Suspension, and Revocation. These GPs and any individual authorization issued thereof may either be modified, suspended, or revoked in whole or in part pursuant to the policies and procedures of 33 CFR 325.7; and any such action shall not be the basis for any claim for damages against the United States.

34. Special Conditions. The USACE may impose other special conditions on a project authorized pursuant to this general permit that are determined necessary to minimize adverse environmental effects or based on any other factor of the public interest. These may be based on concerns from CT DEEP or a Federal resource agency. Failure to comply with all conditions of the authorization, including special conditions, will constitute a permit violation and may subject the permittee to criminal, civil, or administrative penalties and/or restoration.

35. False or Incomplete Information. If USACE decides regarding the eligibility of a project under this permit, and subsequently discovers that it has relied on false, incomplete, or inaccurate information provided by the permittee, the authorization will not be valid, and the U.S. government may institute appropriate legal proceedings.

36. Abandonment. If the permittee decides to abandon the activity authorized under this General Permit, unless such abandonment is merely the transfer of property to a third party, he/she may be required to restore the area to the satisfaction of USACE.

37. Enforcement cases. These GPs do not apply to any existing or proposed activity in USACE jurisdiction associated with an on-going USACE or EPA enforcement action, until such time as the enforcement action is resolved or USACE determines that the activity may proceed independently without compromising the enforcement action.

38. Previously Authorized Activities

a. Completed projects that received prior authorization from USACE (via SV or PCN), shall remain authorized in accordance with the original terms and conditions of those authorizations, including their terms, general conditions, and any special conditions provided in a written verification.

b. Activities authorized pursuant to 33 CFR Part 330.3 ("Activities occurring before certain dates") are not affected by these GPs.

39. Duration of Authorization

a. These GPs expire five years from the date issued as listed at the top of the cover sheet. Activities authorized by these GPs that have either commenced (i.e., are under construction) or are under contract to commence in reliance upon this authorization will have an additional year from the expiration date to complete the work. The permittee must be able to document to USACE satisfaction that the project had commenced or was under contract by the expiration date of these GPs. If work is not completed within the one-year extended timeframe, the permittee must contact USACE. The USACE may issue a new authorization provided the project meets the terms and conditions of the CT GPs in effect at the time.

b. Activities authorized under these GPs will remain authorized until the GP expires, unless discretionary authority has been exercised on a case-by-case basis to require an Individual Permit in accordance with 33 CFR 325.2(e)(2), or the authorization is modified, suspended, or revoked in accordance with 33 CFR 325.7. Activities completed under the SV or PCN authorizations of these GPs will continue to be authorized after its expiration date.

SITE LOCATION MAP
SCALE: 1" = 1000'

SEPTEMBER 2020
REVISED MAY 2021

O'SULLIVAN'S ISLAND FISHING & VIEWING PLATFORM

DERBY, CONNECTICUT

HRP PROJECT NO. NAU3003.CE

PERMIT PLANS FOR REFERENCE ONLY

GENERAL NOTES

1. ALL DIMENSIONS, ELEVATIONS, AND EXISTING CONDITIONS SHALL BE FIELD VERIFIED BY THE CONTRACTOR PRIOR TO CONSTRUCTION. ANY DISCREPANCIES DISCOVERED DURING THE COURSE OF CONSTRUCTION SHALL BE PROMPTLY REPORTED TO THE ENGINEER.
2. THE CONTRACTOR IS RESPONSIBLE FOR DETERMINING, PRIOR TO BIDDING, THE LOCATIONS OF ALL UTILITIES AND SHALL BE RESPONSIBLE FOR ALL DAMAGE TO SAID UTILITIES. THE CONTRACTOR SHALL CONTACT "CALL BEFORE YOU DIG" (1-800-922-4455), AT LEAST 72 HOURS PRIOR TO STARTING CONSTRUCTION. THE CONTRACTOR SHALL COORDINATE ACTIVITIES WITH INDIVIDUAL UTILITY COMPANIES.
3. THE CONTRACTOR IS RESPONSIBLE FOR ENSURING THAT PROPER STORM DRAINAGE IS MAINTAINED THROUGHOUT CONSTRUCTION.
4. ALL SOIL EROSION AND SEDIMENT CONTROL MEASURES SHALL BE INSPECTED AND MAINTAINED ON A REGULAR BASIS AS OUTLINED HEREIN. INSPECTION AND MAINTENANCE SHALL BE CARRIED OUT THROUGHOUT THE CONSTRUCTION PERIOD UNTIL ALL DISTURBED AREAS ARE STABILIZED WITH VEGETATION OR PAVING. THE MINIMUM INSPECTION PERIOD SHALL BE WEEKLY AND AFTER MAJOR STORMS.
5. CONSTRUCTION ACTIVITIES SHALL CONFORM TO APPLICABLE SECTIONS OF THE TOWN OF DERBY STANDARDS AND APPLICABLE SECTIONS OF THE CONNECTICUT DEPARTMENT OF TRANSPORTATION "STANDARD SPECIFICATIONS FOR ROADS, BRIDGES, AND INCIDENTAL CONSTRUCTION," FORM 818, AS AMENDED.
6. NO IN-WATER WORK SHALL BE PERMITTED FROM APRIL 1 TO JUNE 30, INCLUSIVE.
7. FOLLOWING COMPLETION OF CONSTRUCTION, AN AS-BUILT SURVEY SHALL BE PERFORMED AND SUBMITTED TO OWNER AND ENGINEER.

SHEET INDEX

SHEET	TITLE / DESCRIPTION	CREATED	REVISED
	TITLE SHEET	09/16/2020	03/31/2021
E1.0	OVERALL EXISTING CONDITIONS PLAN	09/16/2020	03/31/2021
E1.1	EXISTING CONDITIONS PLAN	09/16/2020	03/31/2021
E1.2	EXISTING CONDITIONS PLAN	09/16/2020	03/31/2021
C1.0	OVERALL SITE LAYOUT PLAN	09/16/2020	12/10/2020
C1.1	SITE LAYOUT PLAN	09/16/2020	05/21/2021
C1.2	SITE LAYOUT PLAN	09/16/2020	12/10/2020
C1.3	CROSS SECTION VIEW	09/16/2020	
C2.1	GRADING PLAN	09/16/2020	03/31/2021
C3.1	SOIL EROSION AND SEDIMENT CONTROL PLAN	09/16/2020	03/31/2021
C3.2	SOIL EROSION AND SEDIMENT CONTROL NOTES & DETAILS	09/16/2020	12/04/2020
C4.1	SITE ACCESS PLAN	09/16/2020	
C5.1 - C5.5	DETAILS	09/16/2020	
C5.6 - C5.8	DETAILS	12/10/2020	
C5.9 - C5.10	DETAILS	05/14/2021	

Prepared By:

HRP
MOVE YOUR ENVIRONMENT FORWARD

197 SCOTT SWAMP ROAD
FARMINGTON, CT 06032
(860) 674-9570
HRPASSOCIATES.COM

Prepared For:

NAUGATUCK VALLEY
COUNCIL OF GOVERNMENTS

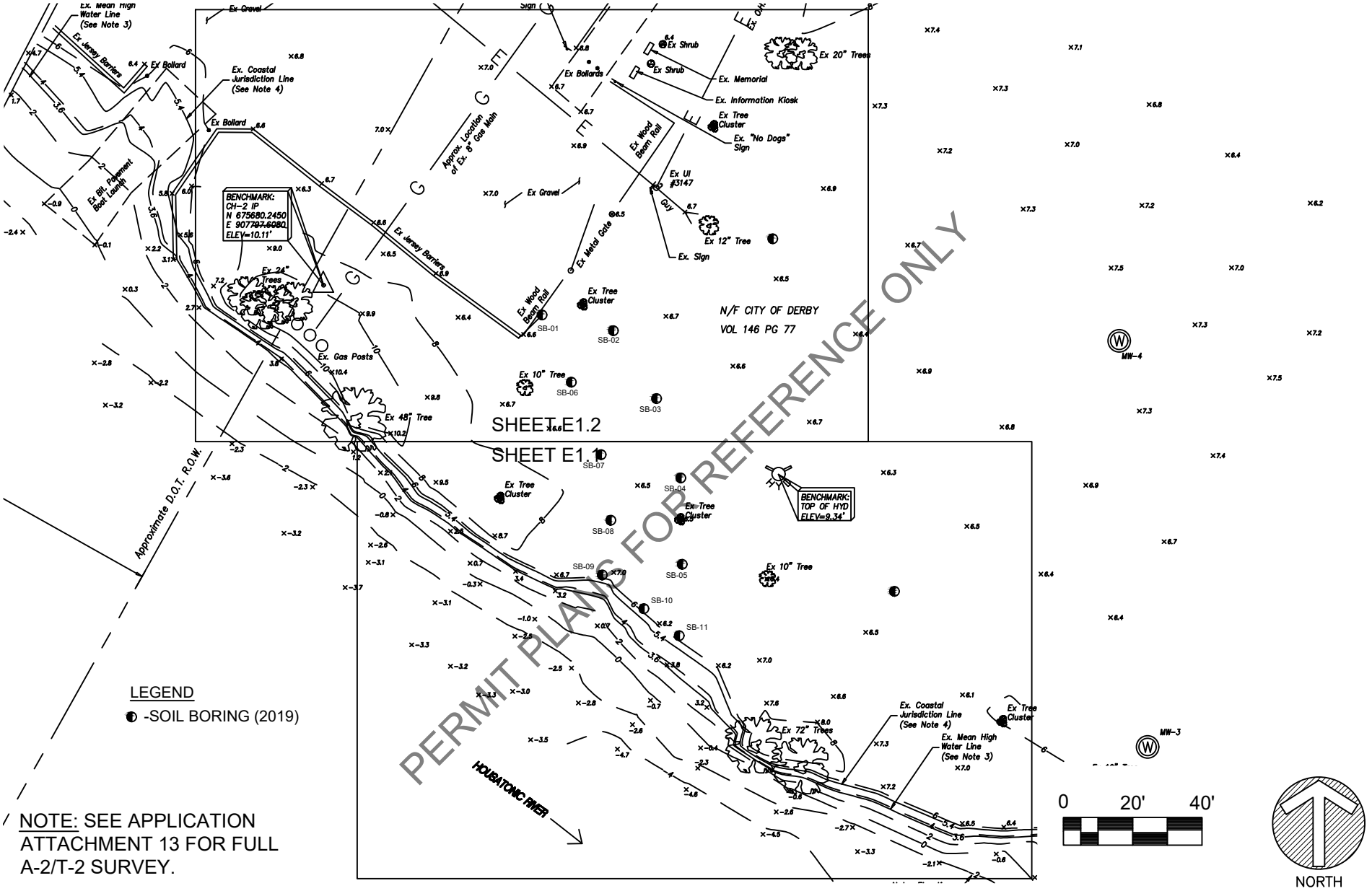

LEGEND

◐ -SOIL BORING (2019)

NOTE: SEE APPLICATION ATTACHMENT 13 FOR FULL A-2/T-2 SURVEY.

PERMIT PLANS FOR REFERENCE ONLY

HRP
MOVE YOUR ENVIRONMENT FORWARD
197 SCOTT SWAMP ROAD
FARMINGTON, CT 06032
(860) 674-9570
HRPASSOCIATES.COM

OVERALL EXISTING CONDITIONS PLAN

O'SULLIVAN'S ISLAND FISHING & VIEWING PLATFORM

DERBY, CONNECTICUT

SCALE:	1" = 40'
ISSUE DATE:	09/16/2020
PROJECT NUMBER:	NAU3003.CE
SHEET NO.	E1.0

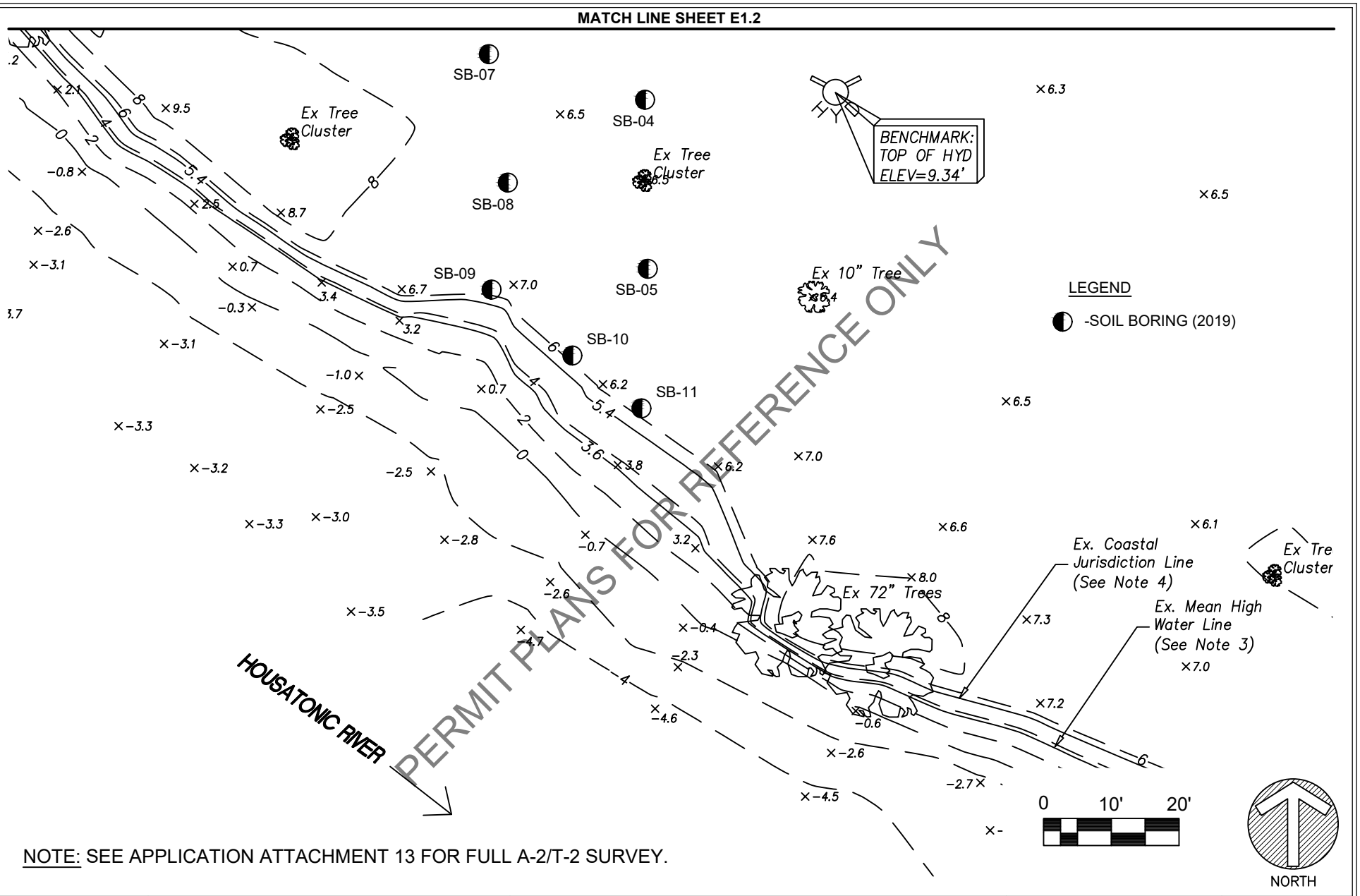

NOTE: SEE APPLICATION ATTACHMENT 13 FOR FULL A-2/T-2 SURVEY.

HRP
MOVE YOUR ENVIRONMENT FORWARD
197 SCOTT SWAMP ROAD
FARMINGTON, CT 06032
(860) 674-9570
HRPASSOCIATES.COM

EXISTING CONDITIONS PLAN

O'SULLIVAN'S ISLAND FISHING & VIEWING PLATFORM

DERBY, CONNECTICUT

SCALE:	1" = 20'
ISSUE DATE:	09/16/2020
PROJECT NUMBER:	NAU3003.CE
SHEET NO.	E1.1

NOTE: SEE APPLICATION ATTACHMENT 13 FOR FULL A-2/T-2 SURVEY.

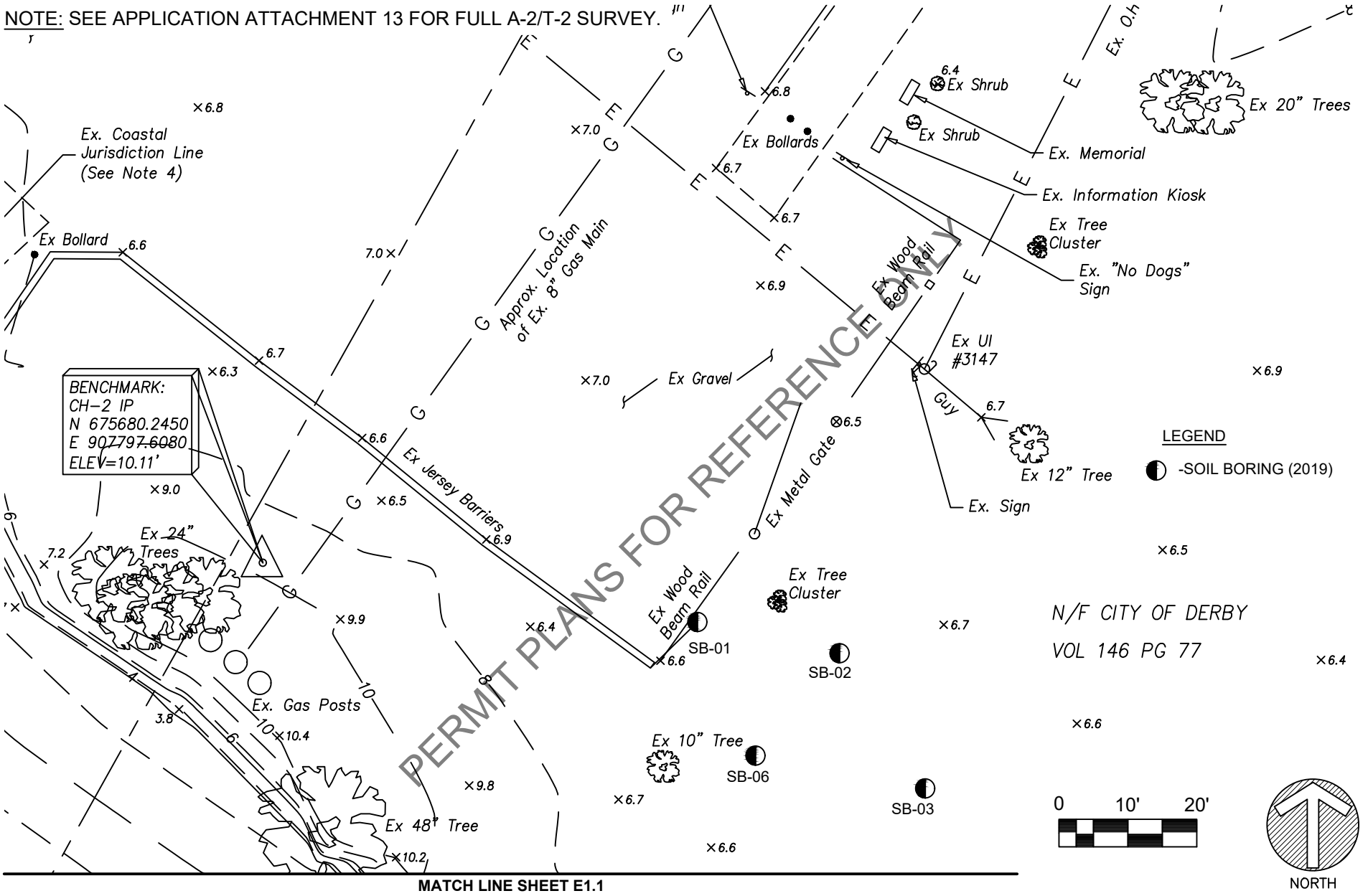

PERMIT PLANS FOR REFERENCE ONLY

HRP
MOVE YOUR ENVIRONMENT FORWARD
197 SCOTT SWAMP ROAD
FARMINGTON, CT 06032
(860) 674-9570
HRPASSOCIATES.COM

EXISTING CONDITIONS PLAN

O'SULLIVAN'S ISLAND FISHING & VIEWING PLATFORM

DERBY, CONNECTICUT

SCALE:	1" = 20'
ISSUE DATE:	09/16/2020
PROJECT NUMBER:	NAU3003.CE
SHEET NO.	E1.2

DRAWING NAME: J:\N\NAUCO - NAUGATUCK VALLEY COUNCIL OF GOVERNMENTS\O'SULLIVAN ISLAND DERBY, CT\NAU3003CE\CAD\C1.1 SITE LAYOUT PLAN.dwg LAYOUT: C1.0 OVERALL SITE LAYOUT PLAN PLOT DATE: May 24, 2021 - 11:17am OPERATOR: EJDR

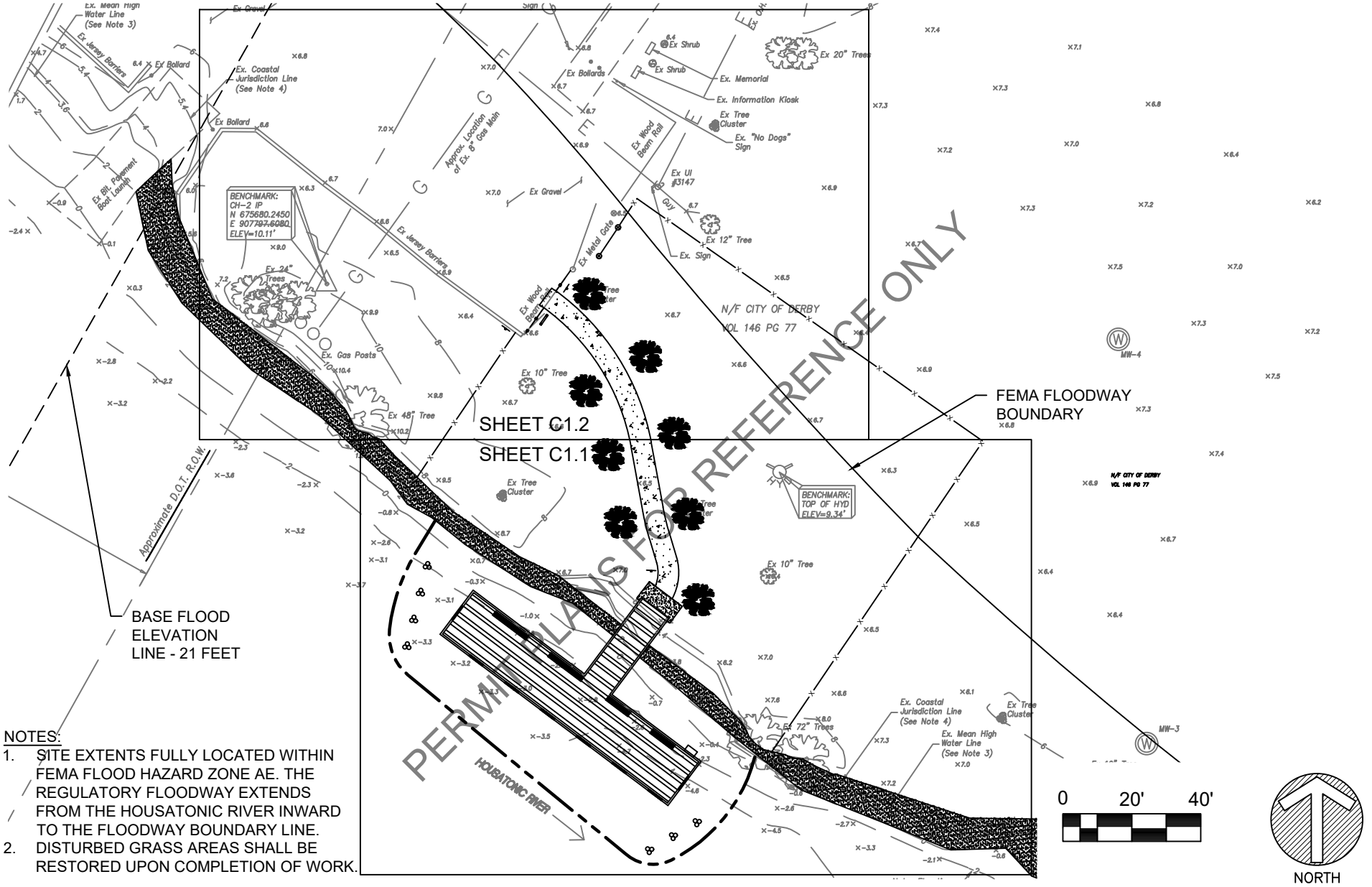

NOTES:

1. SITE EXTENTS FULLY LOCATED WITHIN FEMA FLOOD HAZARD ZONE AE. THE REGULATORY FLOODWAY EXTENDS FROM THE HOUSATONIC RIVER INWARD TO THE FLOODWAY BOUNDARY LINE.
2. DISTURBED GRASS AREAS SHALL BE RESTORED UPON COMPLETION OF WORK.

HRP
MOVE YOUR ENVIRONMENT FORWARD
197 SCOTT SWAMP ROAD
FARMINGTON, CT 06032
(860) 674-9570
HRPASSOCIATES.COM

OVERALL SITE LAYOUT PLAN

O'SULLIVAN'S ISLAND FISHING & VIEWING PLATFORM

DERBY, CONNECTICUT

SCALE:	1" = 40'
ISSUE DATE:	09/16/2020
PROJECT NUMBER:	NAU3003.CE
SHEET NO.	C1.0

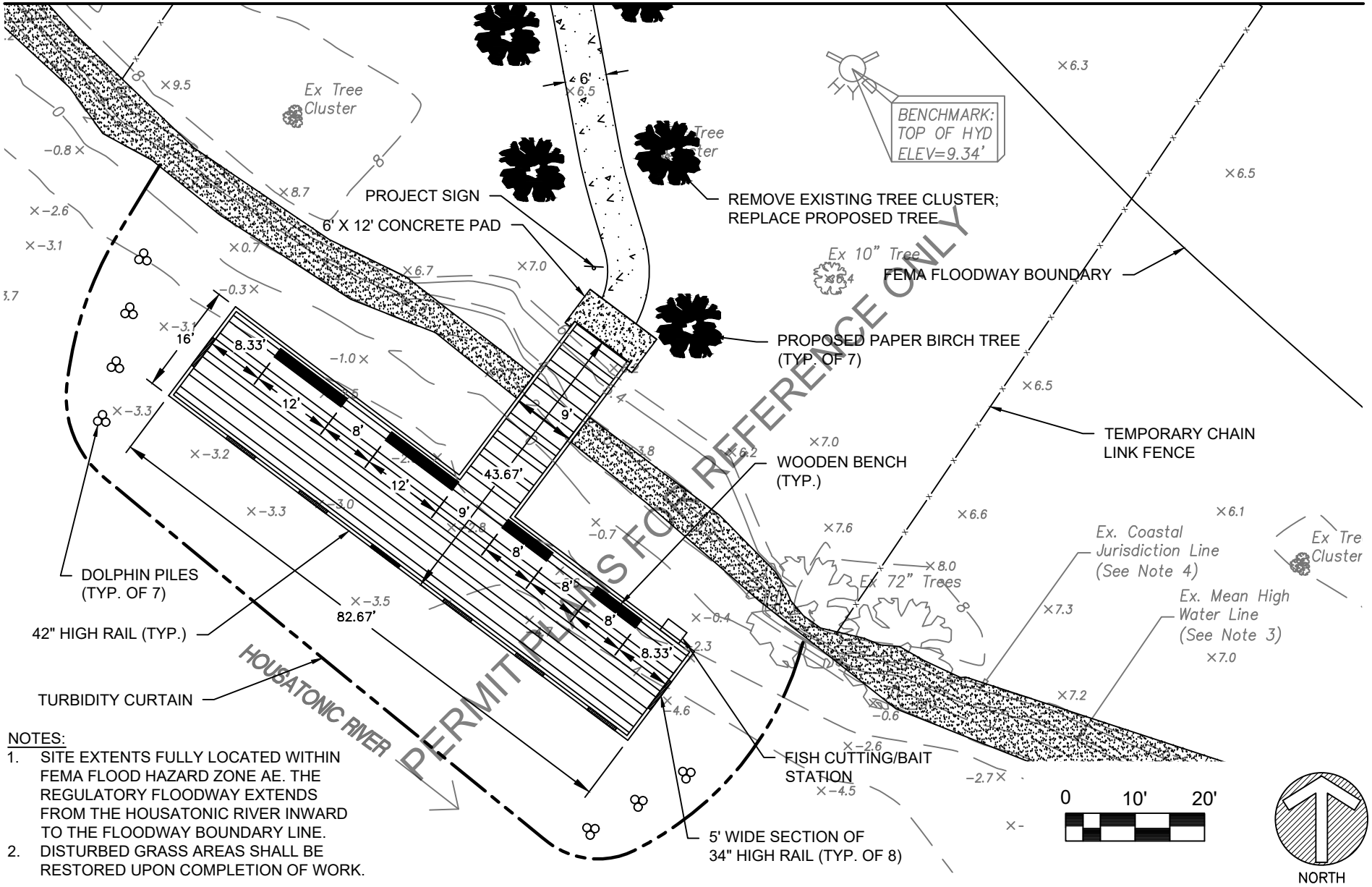

NOTES:
1. SITE EXTENTS FULLY LOCATED WITHIN FEMA FLOOD HAZARD ZONE AE. THE REGULATORY FLOODWAY EXTENDS FROM THE HOUSATONIC RIVER INWARD TO THE FLOODWAY BOUNDARY LINE.
2. DISTURBED GRASS AREAS SHALL BE RESTORED UPON COMPLETION OF WORK.

HRP
MOVE YOUR ENVIRONMENT FORWARD
197 SCOTT SWAMP ROAD
FARMINGTON, CT 06032
(860) 674-9570
HRPASSOCIATES.COM

SITE LAYOUT PLAN

O'SULLIVAN'S ISLAND FISHING & VIEWING PLATFORM

DERBY, CONNECTICUT

SCALE:	1" = 20'
ISSUE DATE:	09/16/2020
PROJECT NUMBER:	NAU3003.CE
SHEET NO.	C1.1

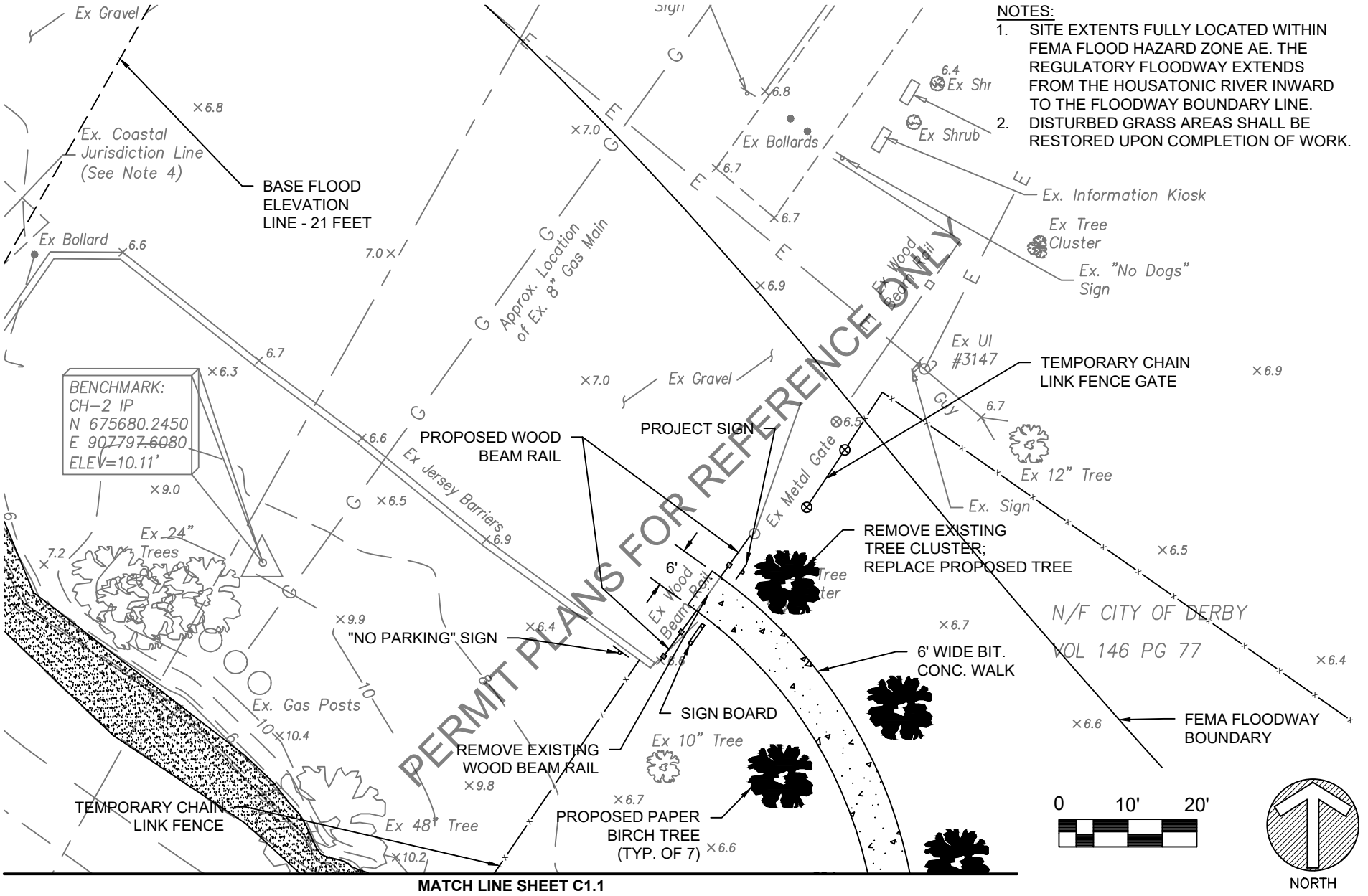

HRP
MOVE YOUR ENVIRONMENT FORWARD
197 SCOTT SWAMP ROAD
FARMINGTON, CT 06032
(860) 674-9570
HRPASSOCIATES.COM

SITE LAYOUT PLAN

O'SULLIVAN'S ISLAND FISHING & VIEWING PLATFORM

DERBY, CONNECTICUT

SCALE:	1" = 20'
ISSUE DATE:	09/16/2020
PROJECT NUMBER:	NAU3003.CE
SHEET NO.	C1.2

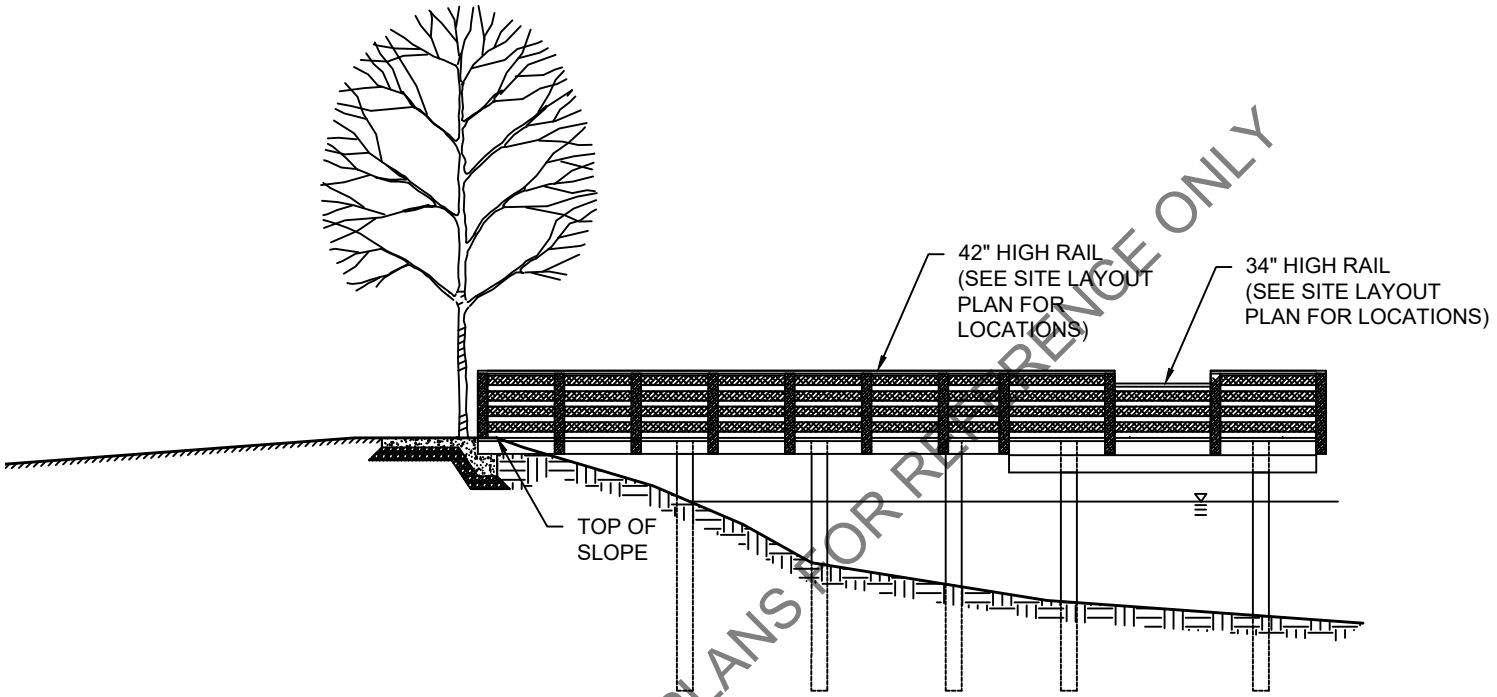

PERMIT PLANS FOR REFERENCE ONLY

NOTE: SEE DETAIL SHEET C5.4 FOR DOCK PLATFORM ELEVATION VIEW.

0 5' 10'

NORTH

HRP
MOVE YOUR ENVIRONMENT FORWARD
197 SCOTT SWAMP ROAD
FARMINGTON, CT 06032
(860) 674-9570
HRPASSOCIATES.COM

SITE LAYOUT CROSS SECTION VIEW

O'SULLIVAN'S ISLAND FISHING & VIEWING PLATFORM

DERBY, CONNECTICUT

SCALE:	1" = 10'
ISSUE DATE:	09/16/2020
PROJECT NUMBER:	NAU3003.CE
SHEET NO.	C1.3

DRAWING NAME: J:\N\NAUCO - NAUGATUCK VALLEY COUNCIL OF GOVERNMENTS\O'SULLIVAN ISLAND DERBY, CT\NAU3003CE\CAD\C2.1 GRADING PLAN.dwg LAYOUT: C2.1 GRADING PLAN PLOT DATE: May 24, 2021 - 11:18am
OPERATOR: EJDR

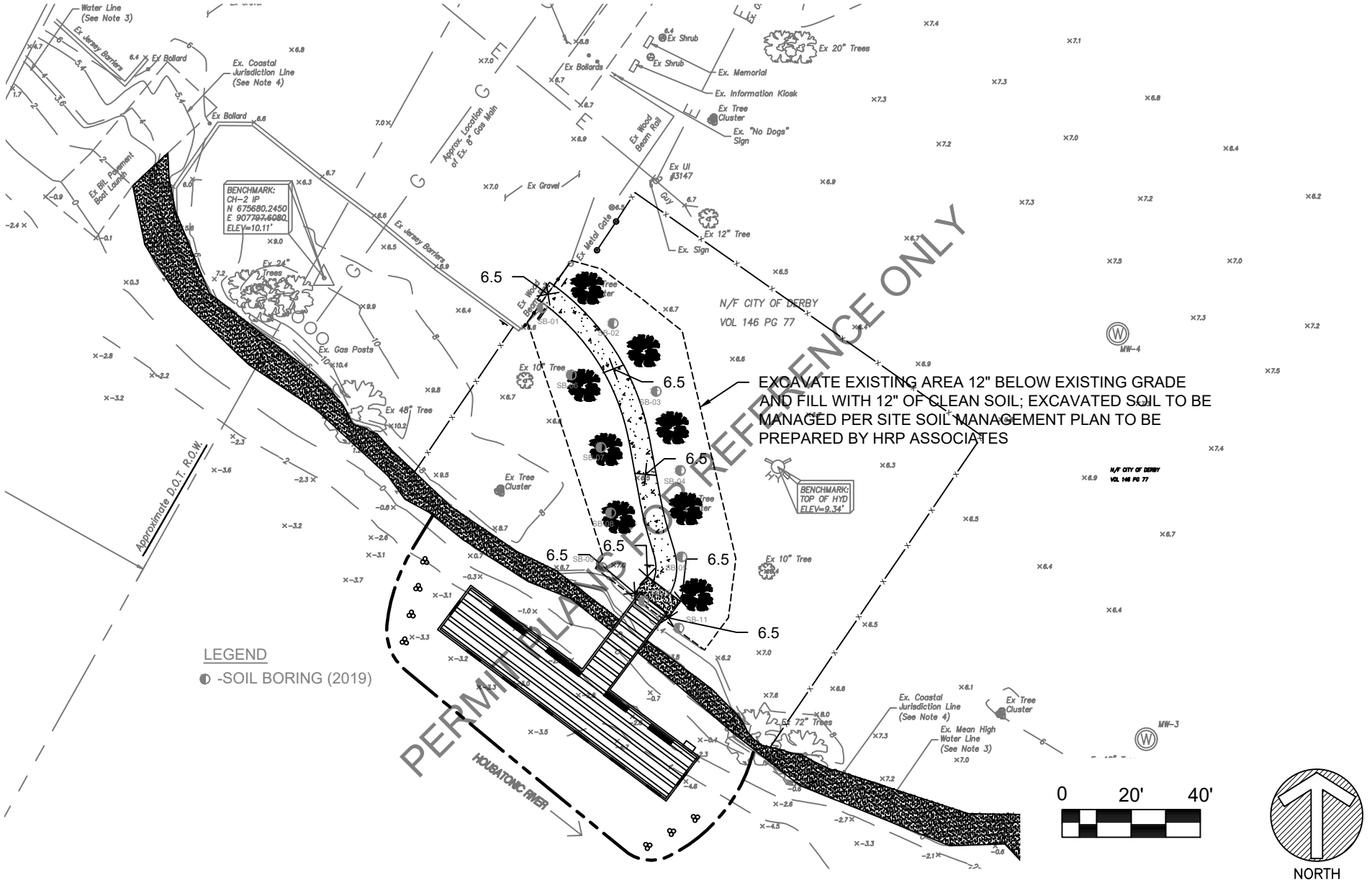

HRP
MOVE YOUR ENVIRONMENT FORWARD
197 SCOTT SWAMP ROAD
FARMINGTON, CT 06032
(860) 674-9570
HRPASSOCIATES.COM

GRADING PLAN

O'SULLIVAN'S ISLAND FISHING & VIEWING PLATFORM

DERBY, CONNECTICUT

SCALE:	1" = 40'
ISSUE DATE:	09/16/2020
PROJECT NUMBER:	NAU3003.CE
SHEET NO.	C2.1

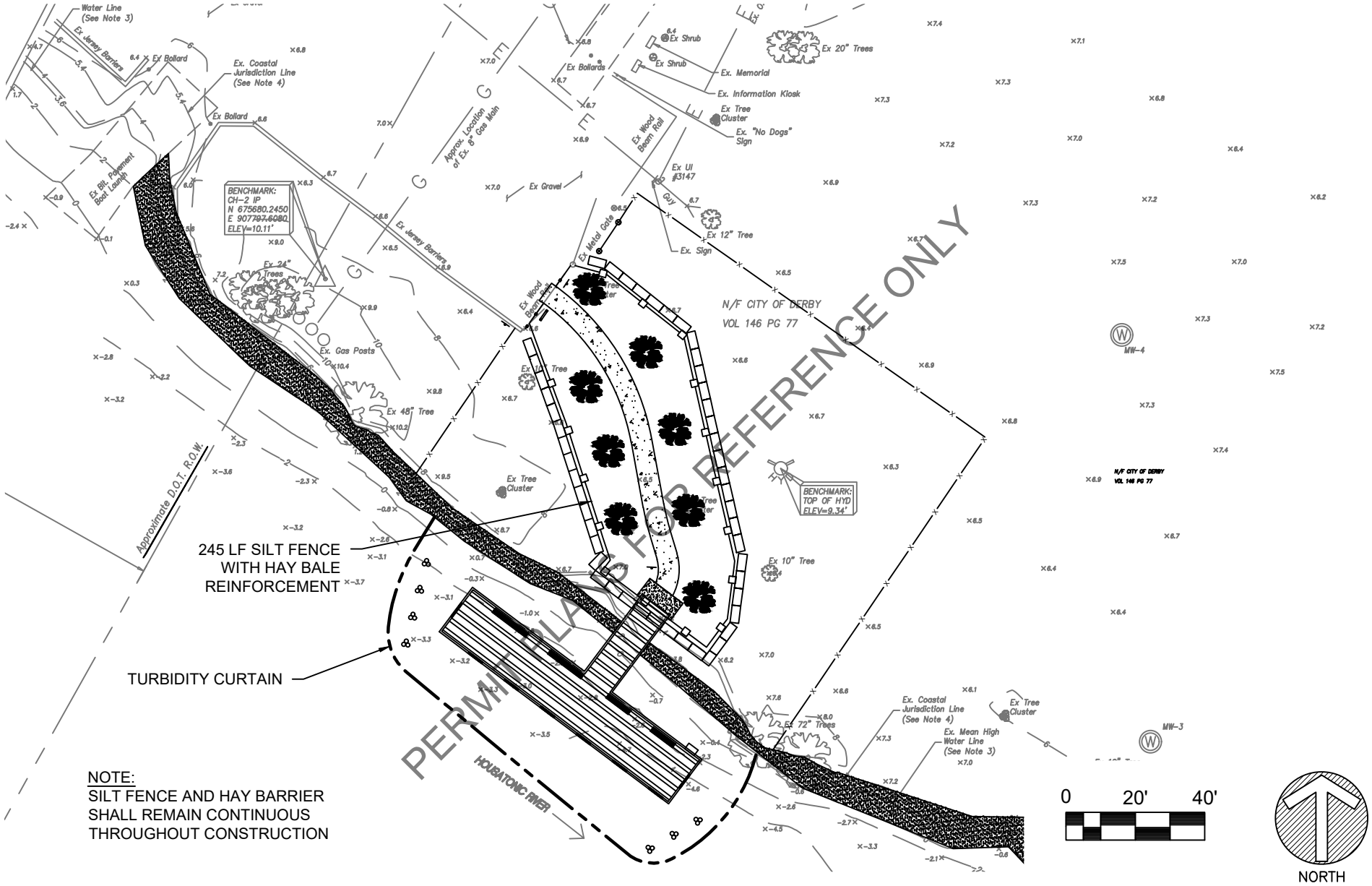

HRP
MOVE YOUR ENVIRONMENT FORWARD
197 SCOTT SWAMP ROAD
FARMINGTON, CT 06032
(860) 674-9570
HRPASSOCIATES.COM

SOIL EROSION AND SEDIMENT CONTROL PLAN

O'SULLIVAN'S ISLAND FISHING & VIEWING PLATFORM

DERBY, CONNECTICUT

SCALE:	1" = 40'
ISSUE DATE:	09/16/2020
PROJECT NUMBER:	NAU3003.CE
SHEET NO.	C3.1

GENERAL

THE PLAN PROPOSES EROSION CONTROL MEASURES TO ADEQUATELY CONTROL ACCELERATED EROSION AND SEDIMENTATION AND REDUCE THE DANGER FROM STORM WATER RUNOFF AT THE SITE. THE RUNOFF SHALL BE CONTROLLED BY THE INTERCEPTION, DIVERSION, AND SAFE DISPOSAL OF PRECIPITATION. RUNOFF SHALL ALSO BE CONTROLLED BY STAGING CONSTRUCTION ACITIVITY AND PRESERVING NATURAL VEGETATION WHENEVER POSSIBLE.

EXISTING VEGETATION SHALL BE PROTECTED AND ONLY THAT CLEARING AND GRUBBING ABSOLUTELY NECESSARY FOR THE PROPOSED CONSTRUCTION SHALL BE PERFORMED. ALL DISTUBED AREAS SHALL BE RESTORED TO THEIR ORIGINAL CONDITION AND CONTOUR, UNLESS OTHERWISE INDICATED ON THE PLANS. THE CONTRACTOR SHALL TAKE A SPECIAL CARE WITH HIS CONSTRUCTION METHODS AND SHALL COMPLY WITH THE FOLLOWING GUIDELINES.

REFERENCE IS MADE TO THE 2002 "CONNECTICUT GUIDELINES FOR SOIL EROSION AND SEDIMENT CONTROL", AS AMENDED. THE GUIDELINES ARE OBTAINABLE FROM THE CONNECTICUT COUNCIL ON SOIL AND WATER CONSERVATION, STATE OFFICE BUILDING, HARTFORD, CONNECTICUT, AND SHOULD BE USED AS A REFERENCE IN CONSTRUCTING THE EROSION AND SEDIMENT CONTROLS INDICATED ON THESE PLANS.

SEDIMENTATION CONTROL

ALL AREAS SHALL BE PROTECTED FROM SEDIMENTATION DURING AND AFTER CONSTRUCTION, PARTICULARLY THE STORAGE OF EXCAVATED OR STOCKPILED MATERIAL. THE CONTRACTOR SHALL CAREFULLY STRIP ALL TOPSOIL, LOAM, OR ORGANIC MATTER PRIOR TO TRENCHING OR OTHER OPERATION, AND SHALL STORE THEM SEPARATELY FROM ALL OTHER MATERIALS DURING EXCAVATION. EACH STOCKPILE MUST BE ADEQUATELY RINGED WITH SEDIMENT CONTROL MATERIAL (I.E. HAY BALES AND/OR GEOTEXTILE).

EROSION CONTROL PLAN

SEDIMENTATION CONTROL SYSTEM - THE SEDIMENTATION CONTROL SYSTEM SHALL CONSIST OF SILT FENCE WITH HAY BALE REINFORCEMENT.

SILT FENCE WITH HAYBALE BACKING - THE SEDIMENTATION CONTROL SYSTEM SHALL BE INSTALLED IMMEDIATELY AFTER A CUT SLOPE HAS BEEN GRADED, BEFORE A FILL SLOPE HAS BEEN CREATED AND AS INDICATED ON THE PLANS. THE SYSTEM IS DESIGNED TO INTERCEPT SILT AND SEDIMENT BEFORE IT REACHES THE WETLAND AREAS, OR WATERCOURSES. DEPOSITS OF SEDIMENT AND SILT ARE TO BE PERIODICALLY REMOVED FOR THE UPSTREAM SIDE OF THE FENCE AND HAYBALES. THIS MATERIAL IS TO BE SPREAD AND STABILIZED IN AREAS NOT SUBJECT TO EROSION, OR IN AREAS WHICH ARE NOT TO BE PAVED OR BUILT ON. THE SEDIMENTATION CONTROL SYSTEM AREAS IS TO BE REPLACED AS NECESSARY TO PROVIDE PROPER FILTERING ACTION. THE SYSTEM IS TO REMAIN IN PLACE AND BE MAINTAINED TO INSURE EFFICIENT SILTATION CONTROL UNTIL ALL AREAS ABOVE THE FENCE ARE STABILIZED AND VEGETATION HAS BEEN ESTABLISHED.

IN ALL AREAS, REMOVAL OF TREES, BUSHES AND OTHER VEGETATION, AND DISTURBANCE OF THE SOIL, IS TO BE KEPT TO AN ABSOLUTE MINIMUM WHILE ALLOWING PROPER DEVELOPMENT OF THE SITE.

DURING CONSTRUCTION, AS SMALL AN AREA OF SOIL AS POSSIBLE SHOULD BE EXPOSED FOR AS SHORT A TIME AS POSSIBLE. AFTER CONSTRUCTION, GRADE, RESPREAD TOPSOIL, AND STABLIZE SOIL BY SEEDING AND MULCHING SO AS TO PREVENT EROSION.

SEDIMENTATION AND EROSION CONTROL MAINTENANCE PROCEDURES

ALL SEDIMENTATION AND EROSION CONTROL DEVICES SHALL BE INSPECTED DURING CONSTRUCTION ON A WEEKLY BASIS, AND FOLLOWING ALL STORMS, BY THE ENGINEER. THE CONTRACTOR SHALL MAINTAIN AND MAKE REPAIRS AND REMOVE SEDIMENT AS REQUESTED BY THE ENGINEER. THIS WORK SHALL BE PERFORMED WITH 24 HOURS OF THE REQUEST AND THERE SHALL BE NO SEPARATE PAYMENT FOR THIS WORK.

THE CONTRACTOR SHALL SWEEP ADJACENT ROADWAYS AS REQUIRED OR REQUESTED BY THE ENGINEER. FOLLOWING COMPLETION OF CONSTRUCTION, THE CONTRACTOR SHALL REPAIR ALL ERODED AREAS AND ENSURE A GOOD STAND OF TURF IS ESTABLISHED THROUGHOUT. THE CONTRACTOR SHALL REPAIR ALL ERODED OR DISPLACED RIPRAP, AND CLEAN SEDIMENT COVERED STONES.

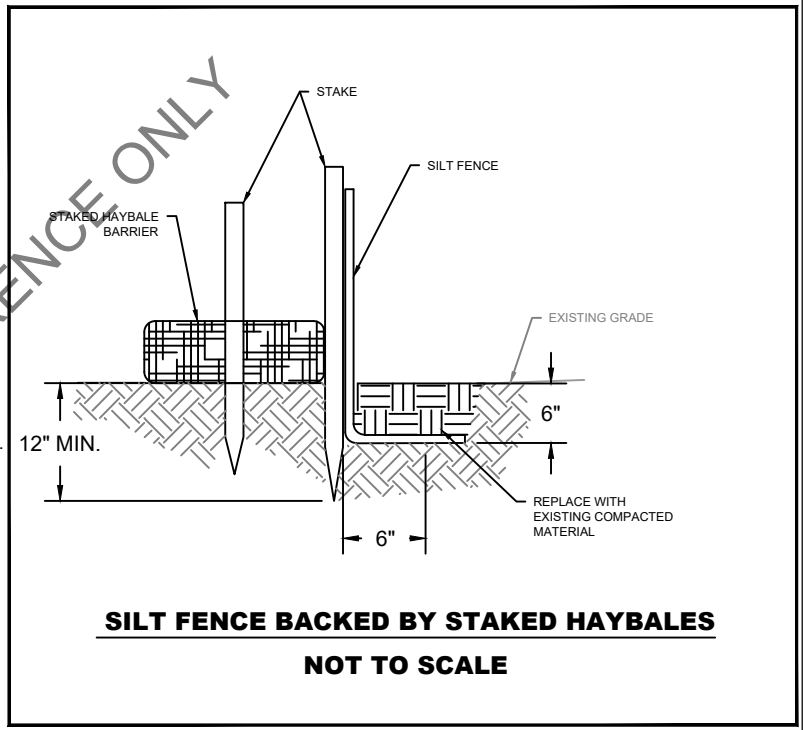

SILT FENCE BACKED BY STAKED HAYBALES

NOT TO SCALE

PERMIT PLANS FOR REFERENCE ONLY

HRP
MOVE YOUR ENVIRONMENT FORWARD
197 SCOTT SWAMP ROAD
FARMINGTON, CT 06032
(860) 674-9570
HRPASSOCIATES.COM

SOIL EROSION AND SEDIMENT CONTROL NOTES AND DETAILS

O'SULLIVAN'S ISLAND FISHING & VIEWING PLATFORM

DERBY, CONNECTICUT

SCALE:	N.T.S.
ISSUE DATE:	09/16/2020
PROJECT NUMBER:	NAU3003.CE
SHEET NO.	C3.2

DRAWING NAME: J:\N\NAUCO - NAUGATUCK VALLEY COUNCIL OF GOVERNMENTS\O'SULLIVAN ISLAND DERBY, CT\NAU3003CE\CAD\C4.1 SITE ACCESS PLAN.dwg LAYOUT: C4.1 SITE ACCESS PLAN PLOT DATE: May 24, 2021 - 11:18am
OPERATOR: EJDR

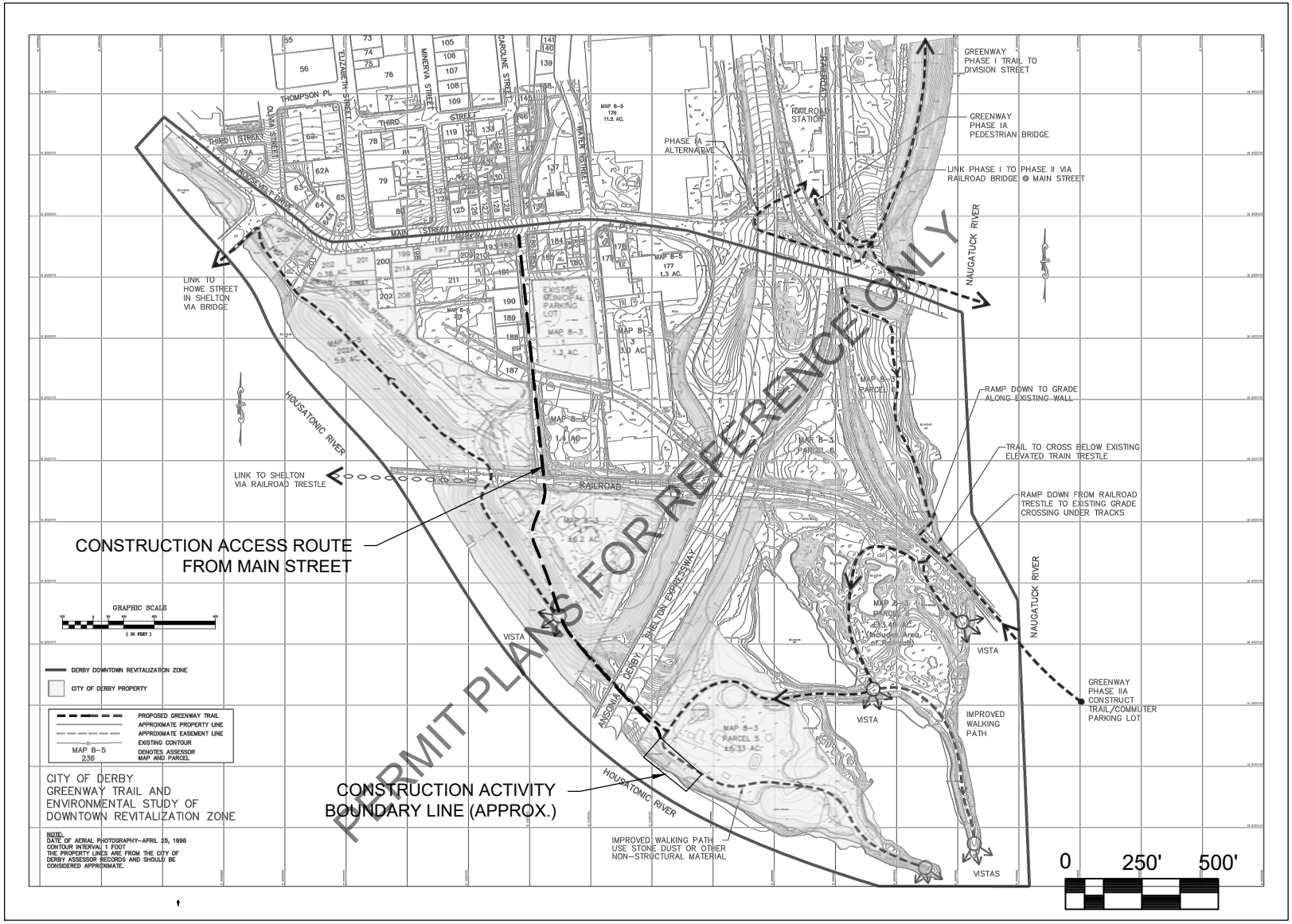

HRP
MOVE YOUR ENVIRONMENT FORWARD
197 SCOTT SWAMP ROAD
FARMINGTON, CT 06032
(860) 674-9570
HRPASSOCIATES.COM

SITE ACCESS PLAN

O'SULLIVAN'S ISLAND FISHING & VIEWING PLATFORM

DERBY, CONNECTICUT

SCALE:	1" = 500'
ISSUE DATE:	09/16/2020
PROJECT NUMBER:	NAU3003.CE
SHEET NO.	C4.1

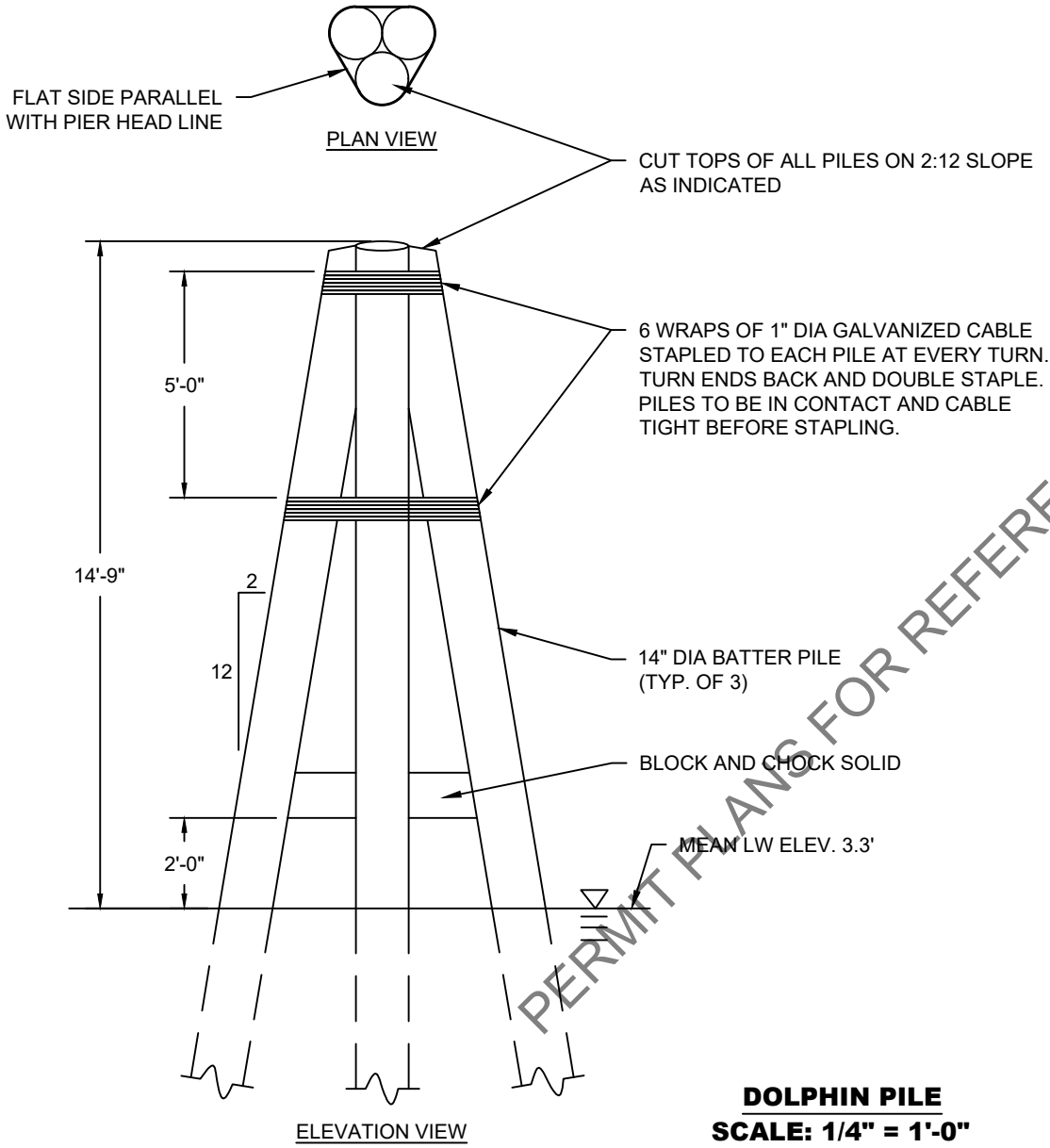

DOLPHIN PILE
SCALE: 1/4" = 1'-0"

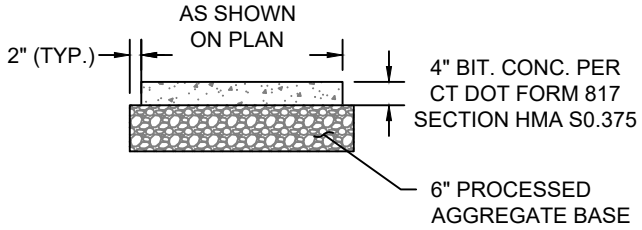

BITUMINOUS CONCRETE WALK
NOT TO SCALE

PERMIT PLANS FOR REFERENCE ONLY

HRP
MOVE YOUR ENVIRONMENT FORWARD
197 SCOTT SWAMP ROAD
FARMINGTON, CT 06032
(860) 674-9570
HRPASSOCIATES.COM

DETAILS

O'SULLIVAN'S ISLAND FISHING
& VIEWING PLATFORM

DERBY, CONNECTICUT

SCALE:	AS NOTED
ISSUE DATE:	09/16/2020
PROJECT NUMBER:	NAU3003.CE

SHEET NO. **C5.1**

PROJECT NOTES AND SPECIFICATIONS:

1. ALL HARDWARE TO BE HOT DIPPED GALVANIZED.
2. PRESSURE TREAT PILE CAP BEAMS AND STRINGERS TO 0.60 PCF CCA.
3. PRESSURE TREAT DECKING TO 0.15 PCF COPPER AZAL.
4. PRESSURE TREATMENT / LUMBER SUPPLY CALL RANDY KELLY AT KOPPERS 908 400 8862.
5. BOLTS 3/4"ø HOT DIPPED GALVANIZED.
6. ANGLE 8X4X$\frac{7}{16}$" HOT DIPPED GALVANIZED.
7. CONCRETE 4000 PSI 5–7% AIR, 4" SLUMP, BROOM FINISH.
8. EPOXY COATED A615 REBAR.
9. ALL REINFORCING STEEL TO HAVE 2" MIN. CONCRETE COVER.
10. PROVIDE FIXED DOLPHINS UPSTREAM.
11. PROVIDE RAILING SYSTEM CAPABLE OF RESISTING 200 POUND POINT LOAD IN ANY DIRECTION AND 50 PSF UNIFORM LOAD.

PIER LAYOUT - PLAN VIEW
SCALE: 1/10" = 1'-0"

NOTE: SEE DETAILS SHEETS C5.3–C5.4 FOR SECTION VIEWS.

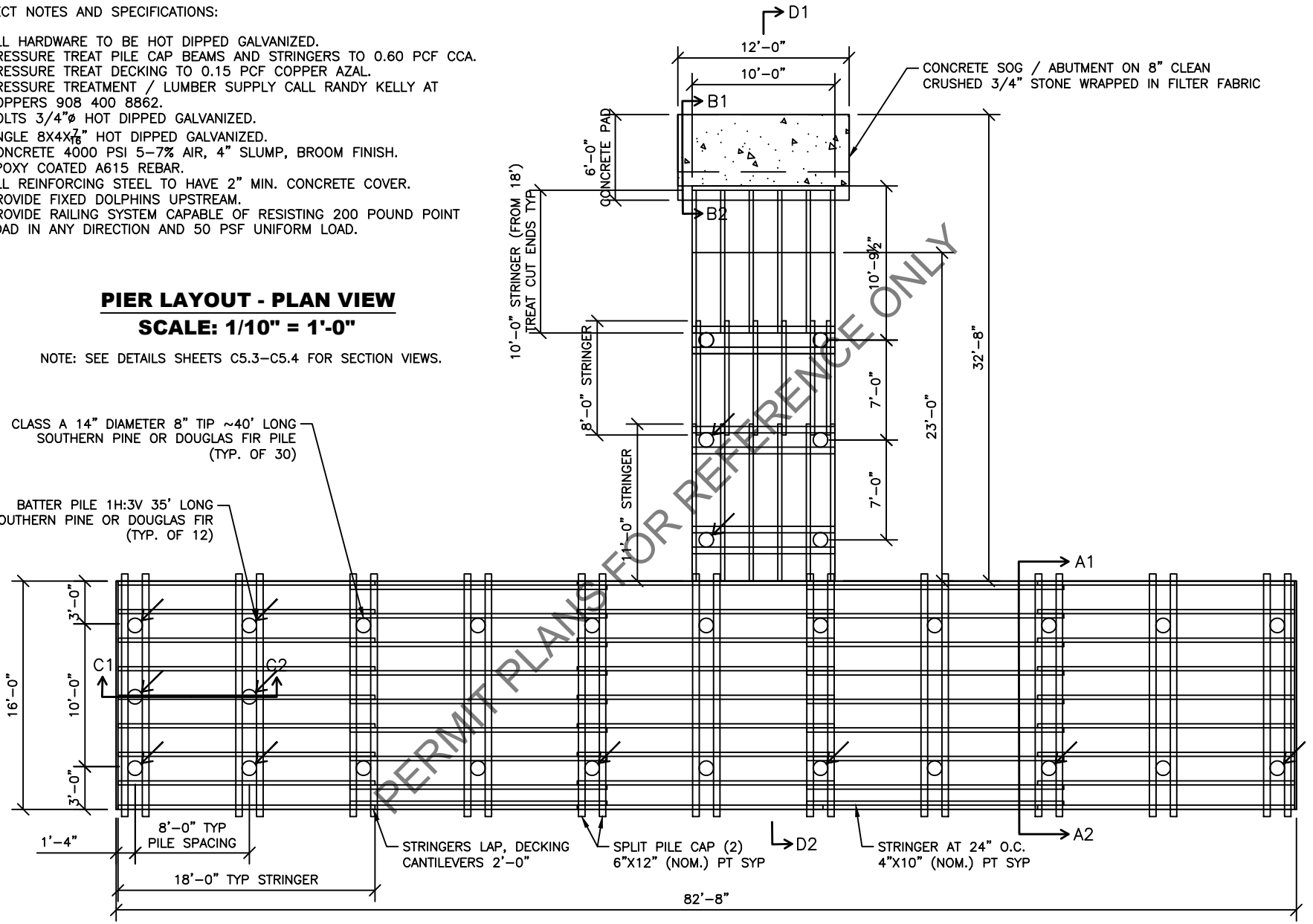

PERMIT PLANS FOR REFERENCE ONLY

HRP
MOVE YOUR ENVIRONMENT FORWARD
197 SCOTT SWAMP ROAD
FARMINGTON, CT 06032
(860) 674-9570
HRPASSOCIATES.COM

DETAILS

O'SULLIVAN'S ISLAND FISHING & VIEWING PLATFORM

DERBY, CONNECTICUT

SCALE:	AS NOTED
ISSUE DATE:	09/16/2020
PROJECT NUMBER:	NAU3003.CE

C5.2

SHEET NO.

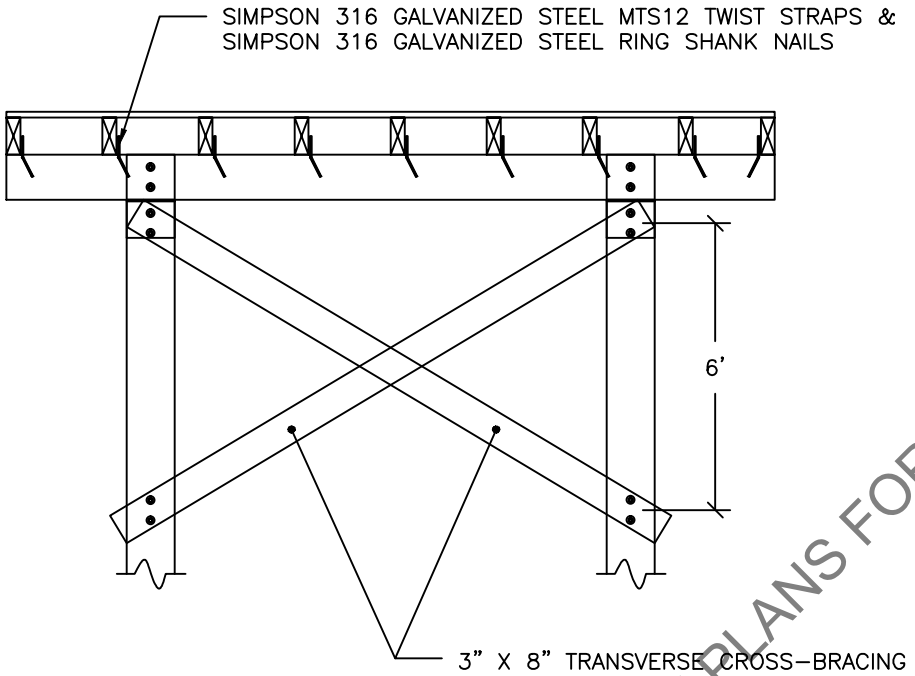

NOTE: LONGITUDINAL BRACING SIMILAR IN DETAIL TO TRANSVERSE BRACING

BRACING & STRINGER TO PILE CAP CONNECTION A1-A2
SCALE: 1/4" = 1'-0"

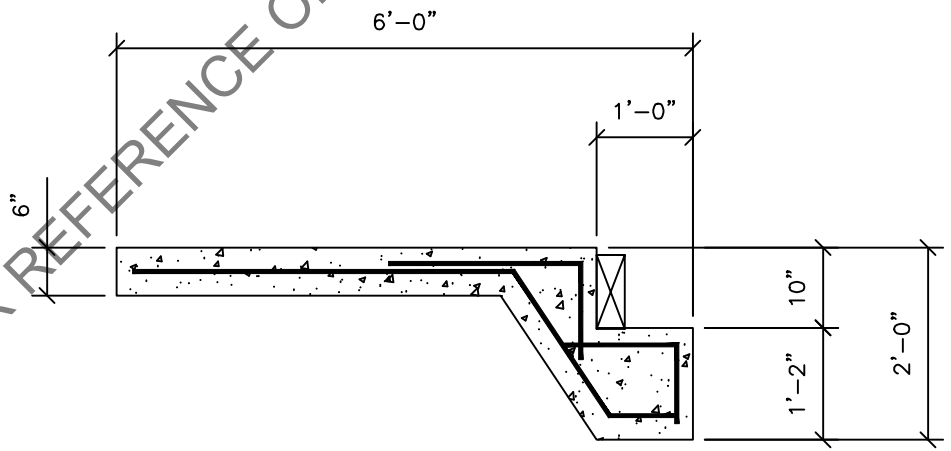

PROFILE VIEW SECTION B1-B2
SCALE: 1/2" = 1'-0"

PERMIT PLANS FOR REFERENCE ONLY

HRP
MOVE YOUR ENVIRONMENT FORWARD
197 SCOTT SWAMP ROAD
FARMINGTON, CT 06032
(860) 674-9570
HRPASSOCIATES.COM

DETAILS

O'SULLIVAN'S ISLAND FISHING & VIEWING PLATFORM

DERBY, CONNECTICUT

AS NOTED
SCALE:

09/16/2020
ISSUE DATE:

NAU3003.CE
PROJECT NUMBER:

C5.3
SHEET NO.

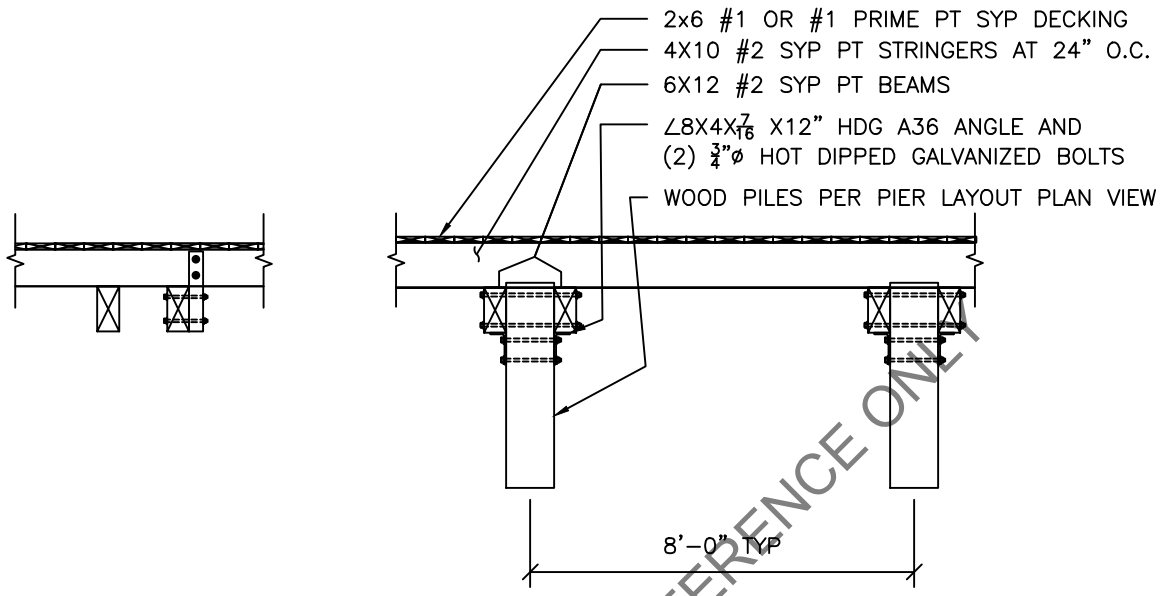

PROFILE VIEW SECTION C1-C2
SCALE: 1/4" = 1'-0"

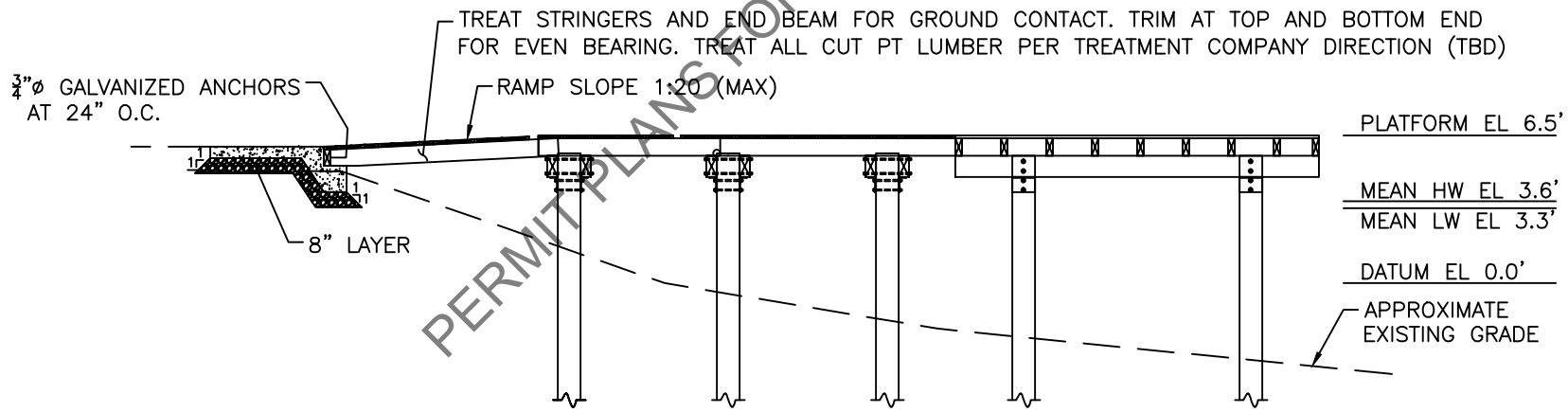

ELEVATION VIEW SECTION D1-D2
SCALE: 1/8" = 1'-0"

PERMIT PLANS FOR REFERENCE ONLY

HRP
MOVE YOUR ENVIRONMENT FORWARD
197 SCOTT SWAMP ROAD
FARMINGTON, CT 06032
(860) 674-9570
HRPASSOCIATES.COM

DETAILS

O'SULLIVAN'S ISLAND FISHING & VIEWING PLATFORM

DERBY, CONNECTICUT

SCALE:	AS NOTED
ISSUE DATE:	09/16/2020
PROJECT NUMBER:	NAU3003.CE

C5.4

SHEET NO.

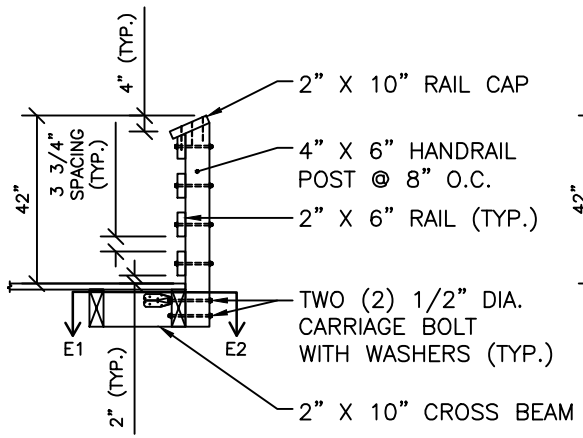

34" HIGH RAIL
SECTION VIEW

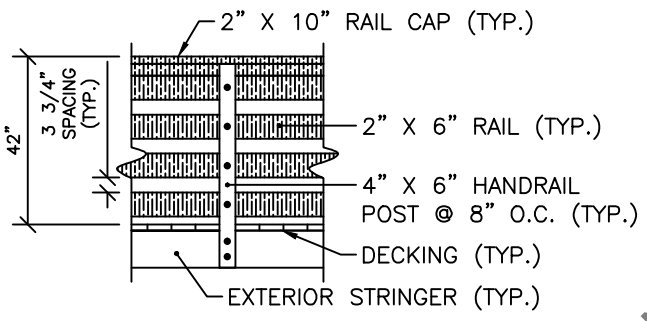

42" HIGH RAIL
ELEVATION VIEW

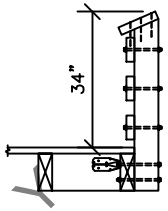

34" HIGH RAIL
SECTION VIEW

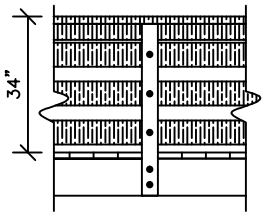

34" HIGH RAIL
ELEVATION VIEW

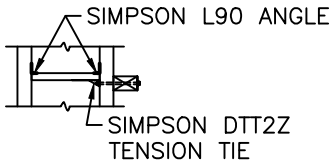

SECTION E1–E2
PLAN VIEW

DECK RAILING DETAILS
SCALE: 1/4" = 1'-0"

NOTE: SEE SITE LAYOUT PLAN SHEET C1.1 FOR 42" HIGH RAIL AND 34" HIGH RAIL LOCATIONS.

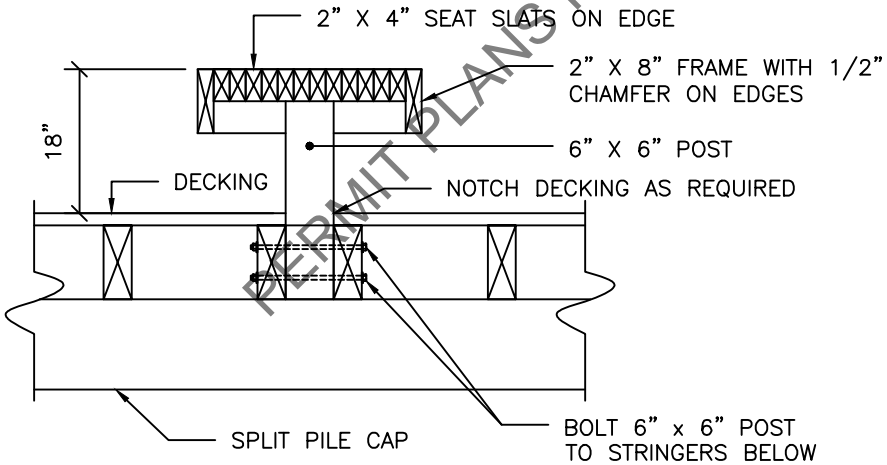

BENCH DETAIL
SCALE: 1/2" = 1'-0"

NOTE: SEE SITE LAYOUT PLAN SHEET C1.1 FOR BENCH LOCATIONS.

PERMIT PLANS FOR REFERENCE ONLY

HRP
MOVE YOUR ENVIRONMENT FORWARD
197 SCOTT SWAMP ROAD
FARMINGTON, CT 06032
(860) 674-9570
HRPASSOCIATES.COM

DETAILS

O'SULLIVAN'S ISLAND FISHING & VIEWING PLATFORM

DERBY, CONNECTICUT

SCALE:	AS NOTED
ISSUE DATE:	09/16/2020
PROJECT NUMBER:	NAU3003.CE

SHEET NO. **C5.5**

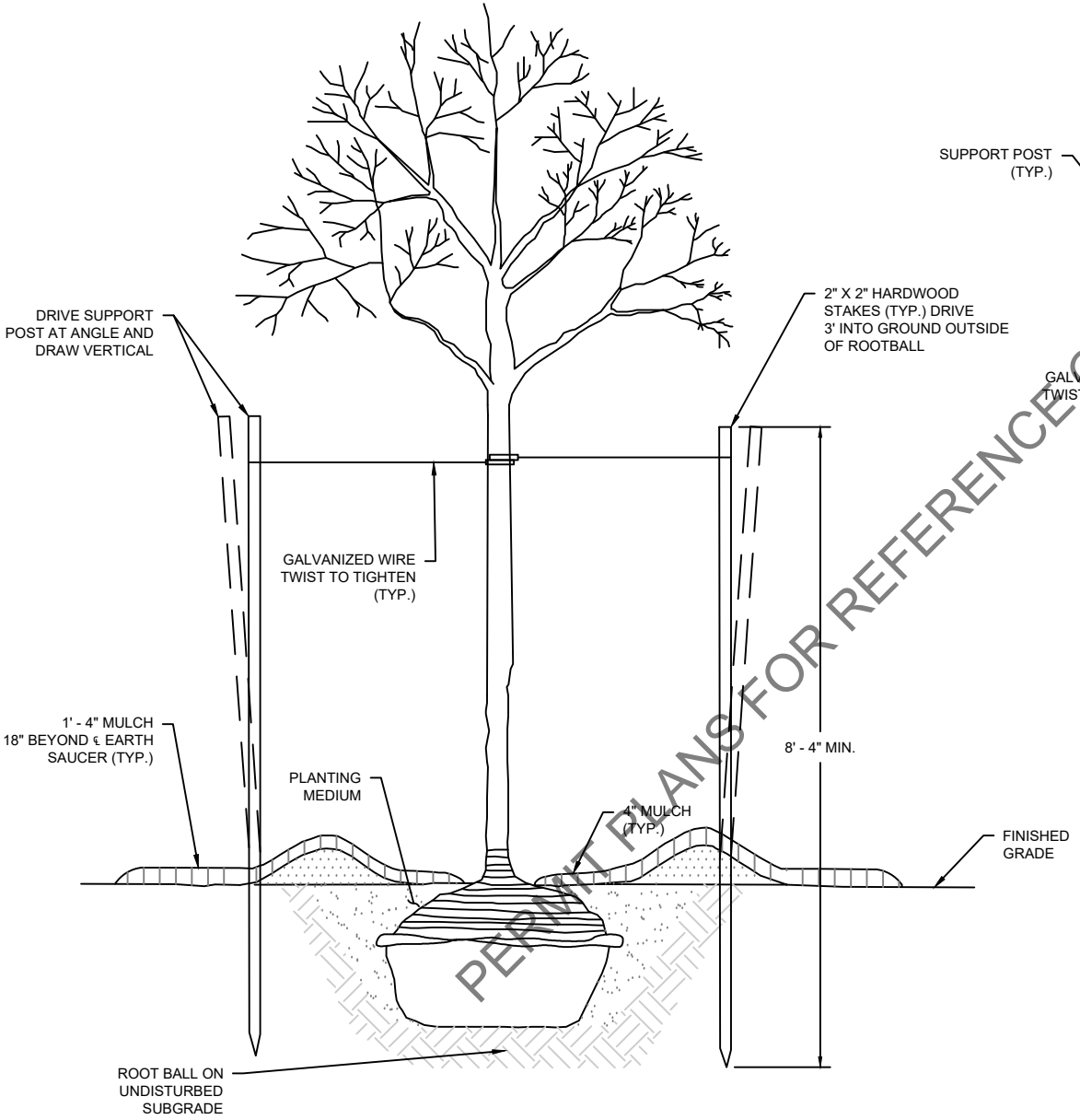

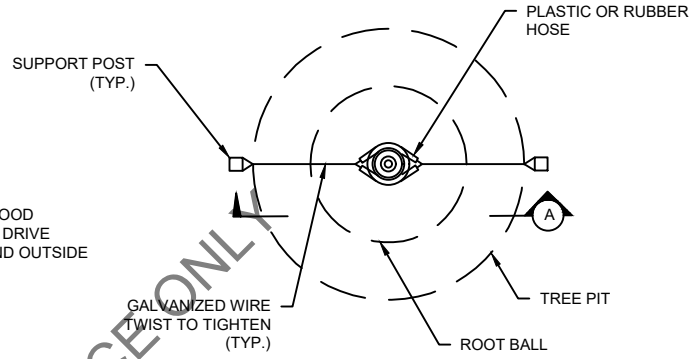

NOTES:

1. USE 3 POSTS FOR STAKING EVERGREEN TREES 8' HIGH OR GREATER. USE 2 POSTS FOR STAKING EVERGREEN TREES LESS THAN 8' HIGH.
2. THE PLANTING PIT SIZE SHALL BE TWICE THE DIAMETER OF THE ROOT BALL IN WIDTH AND LESS THAN 2" LESS THAN THE HEIGHT OF THE ROOT BALL.
3. ALL EXTERIOR PACKAGING MATERIAL APPLIED TO THE PLANTS SHALL BE REMOVED AFTER THE PLANT IS LOCATED IN THE PLANTING PIT. CUT AND REMOVE TWINE, BURLAP, OR WIRE BASKETS FROM THE TOP 2/3 OF THE ROOT BALL.
4. USE DOUBLE STRAND NO.10 WIRE FOR EVERGREEN TREES GREATER THAN OR EQUAL TO 8" CALIPER.
5. TREE TRUNK WRAPPING MATERIAL SHALL BE USED AS DIRECTED BY THE ENGINEER.

TREE PLANTING DETAIL
NOT TO SCALE

PERMIT PLANS FOR REFERENCE ONLY

HRP
MOVE YOUR ENVIRONMENT FORWARD
197 SCOTT SWAMP ROAD
FARMINGTON, CT 06032
(860) 674-9570
HRPASSOCIATES.COM

DETAILS

O'SULLIVAN'S ISLAND FISHING & VIEWING PLATFORM

DERBY, CONNECTICUT

SCALE:	AS NOTED
ISSUE DATE:	12/10/2020
PROJECT NUMBER:	NAU3003.CE
SHEET NO.	C5.6

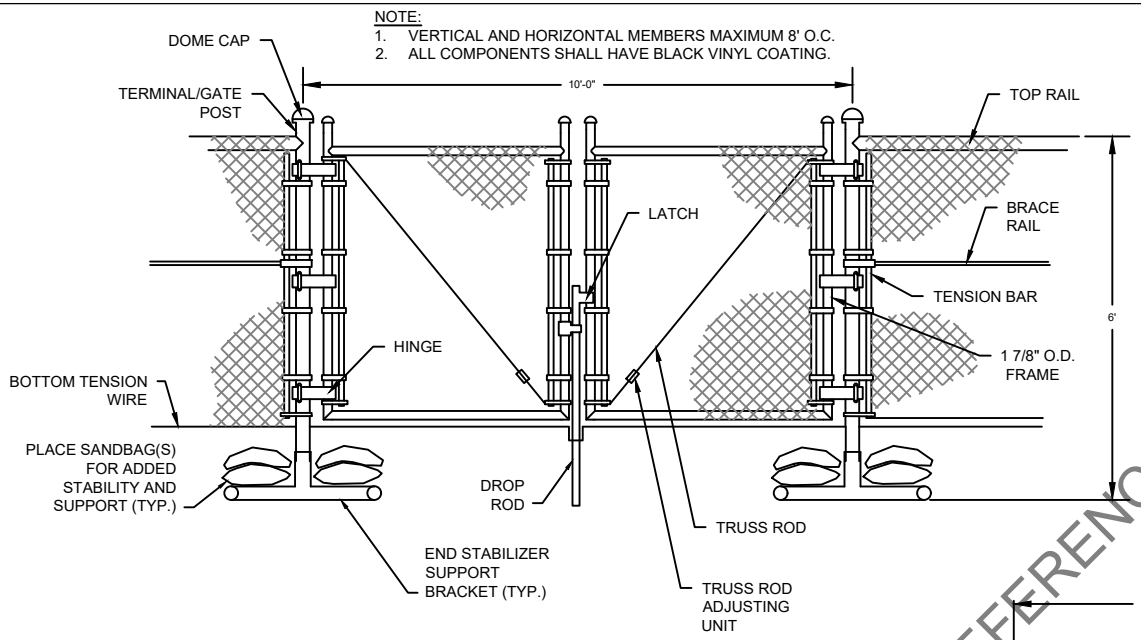

PORTABLE SWING GATE
NOT TO SCALE

PERMIT PLANS FOR REFERENCE ONLY

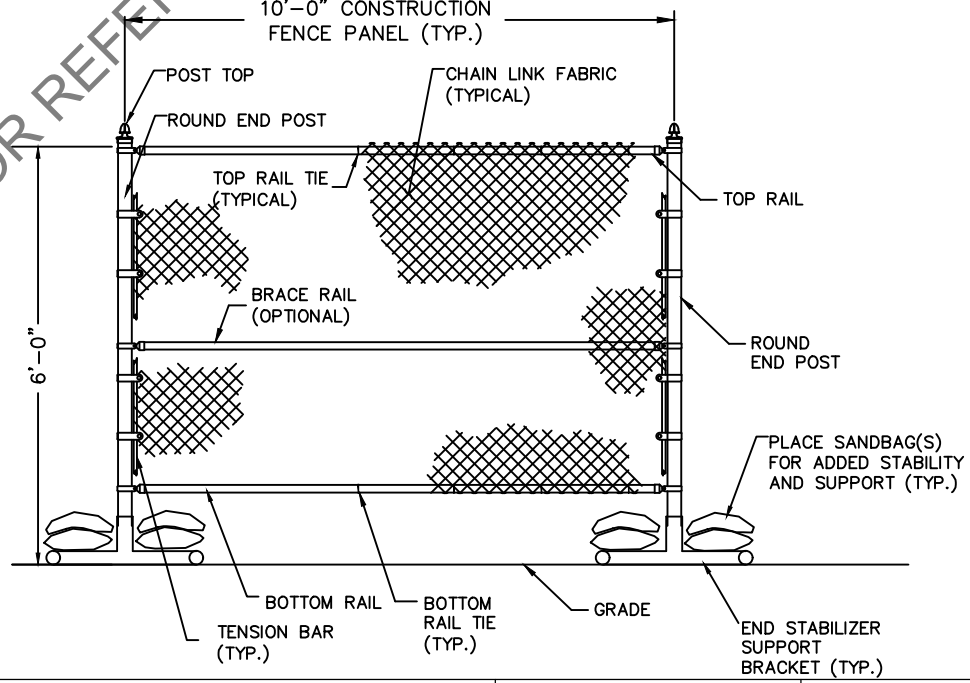

PORTABLE CONSTRUCTION CHAIN LINK FENCE
NOT TO SCALE

HRP
MOVE YOUR ENVIRONMENT FORWARD
197 SCOTT SWAMP ROAD
FARMINGTON, CT 06032
(860) 674-9570
HRPASSOCIATES.COM

DETAILS

O'SULLIVAN'S ISLAND FISHING & VIEWING PLATFORM

DERBY, CONNECTICUT

SCALE:	AS NOTED
ISSUE DATE:	12/10/2020
PROJECT NUMBER:	NAU3003.CE
SHEET NO.	C5.7

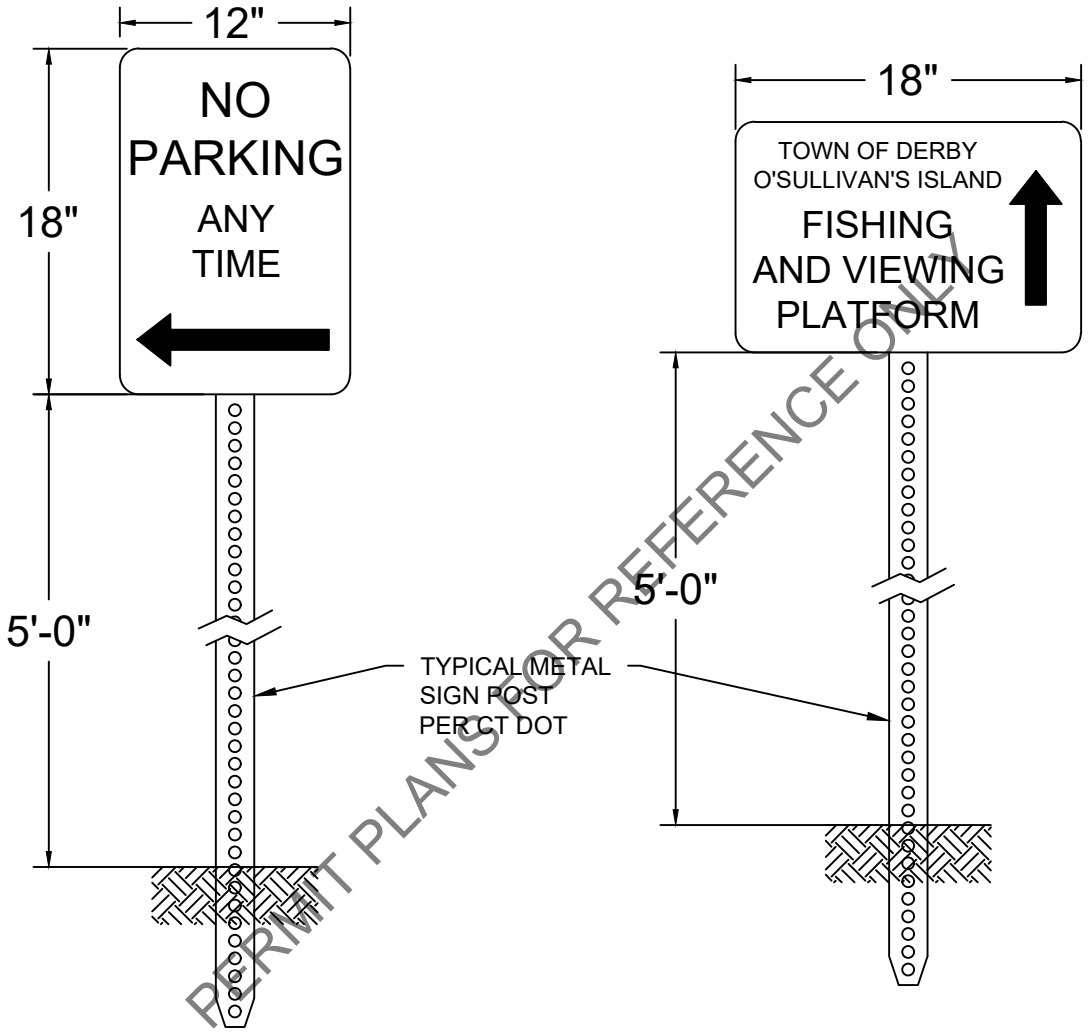

PERMIT PLANS FOR REFERENCE ONLY

MUTCD NO. R7-1 "NO PARKING" SIGN
NOT TO SCALE

PROJECT SIGN
NOT TO SCALE

HRP
MOVE YOUR ENVIRONMENT FORWARD
197 SCOTT SWAMP ROAD
FARMINGTON, CT 06032
(860) 674-9570
HRPASSOCIATES.COM

DETAILS

O'SULLIVAN'S ISLAND FISHING
& VIEWING PLATFORM

DERBY, CONNECTICUT

AS NOTED	SCALE:
12/10/2020	ISSUE DATE:
NAU3003.CE	PROJECT NUMBER:

C5.8
SHEET NO.

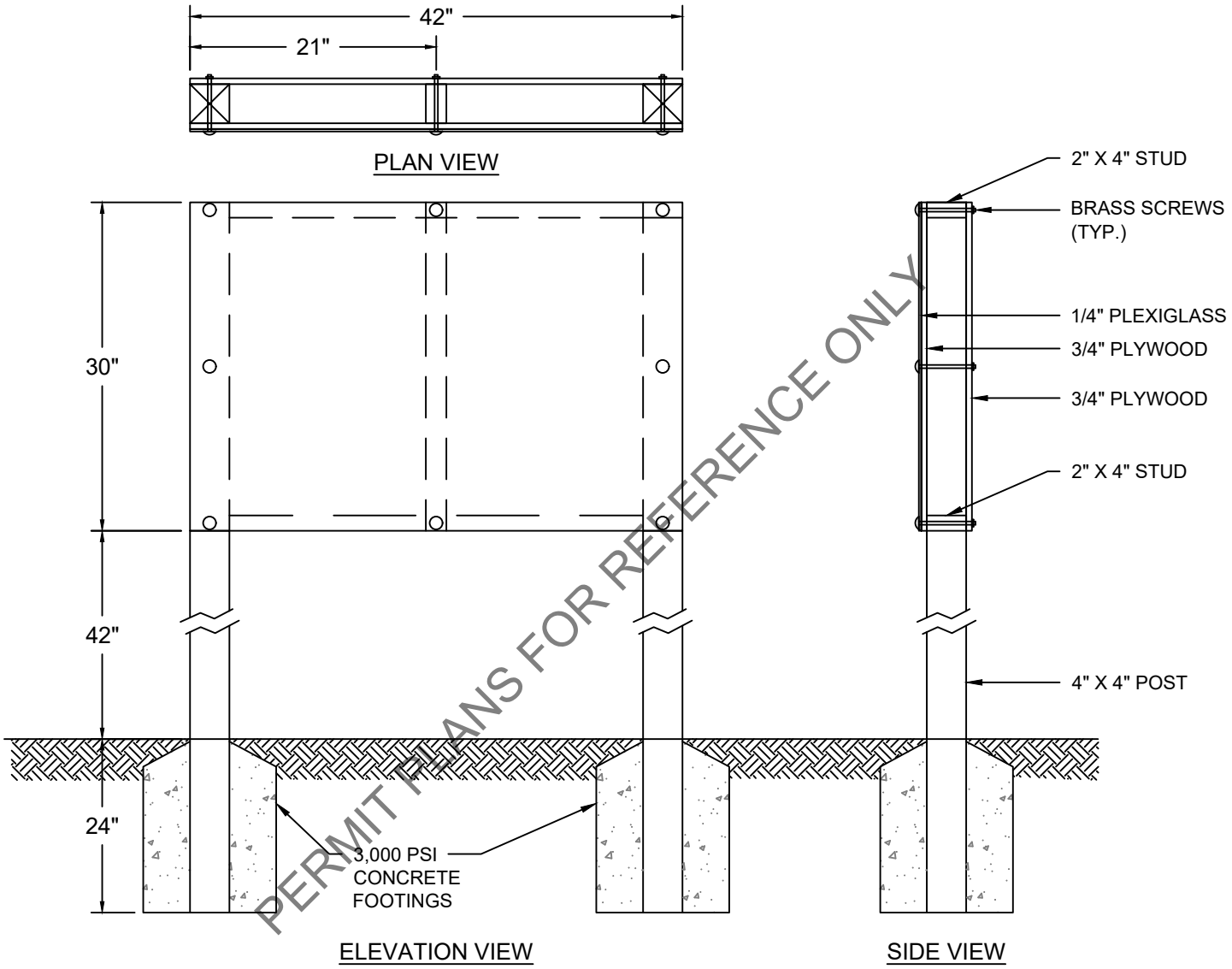

PERMIT PLANS FOR REFERENCE ONLY

SIGN BOARD
NOT TO SCALE

HRP
MOVE YOUR ENVIRONMENT FORWARD
197 SCOTT SWAMP ROAD
FARMINGTON, CT 06032
(860) 674-9570
HRPASSOCIATES.COM

DETAILS

O'SULLIVAN'S ISLAND FISHING
& VIEWING PLATFORM

DERBY, CONNECTICUT

SCALE:	AS NOTED
ISSUE DATE:	05/14/2021
PROJECT NUMBER:	NAU3003.CE

C5.9
SHEET NO.

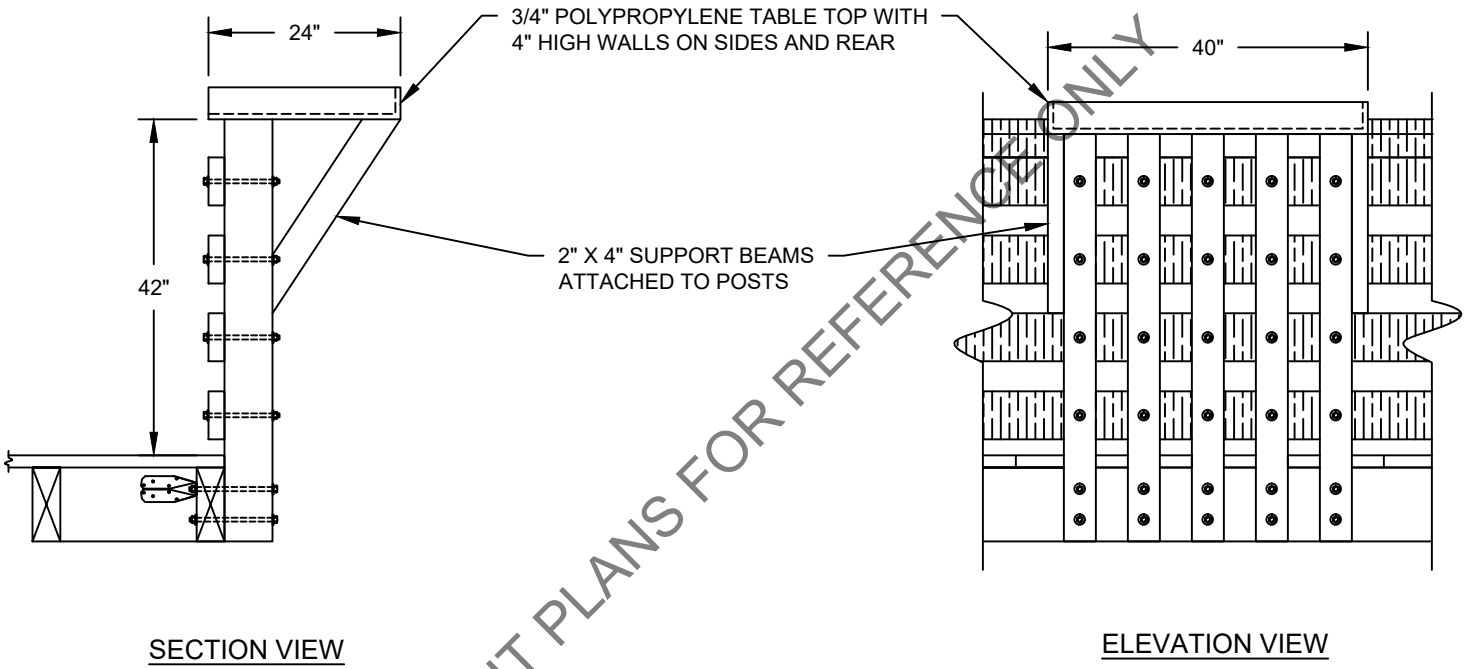

SECTION VIEW

ELEVATION VIEW

PERMIT PLANS FOR REFERENCE ONLY

FISH CUTTING/BAIT STATION
NOT TO SCALE

HRP
MOVE YOUR ENVIRONMENT FORWARD
197 SCOTT SWAMP ROAD
FARMINGTON, CT 06032
(860) 674-9570
HRPASSOCIATES.COM

DETAILS

O'SULLIVAN'S ISLAND FISHING
& VIEWING PLATFORM

DERBY, CONNECTICUT

SCALE:	AS NOTED
ISSUE DATE:	05/14/2021
PROJECT NUMBER:	NAU3003.CE

C5.10
SHEET NO.

Connecticut Department of
ENERGY &
ENVIRONMENTAL
PROTECTION

Bureau of Water Protection and Land Reuse
Land & Water Resources Division

79 Elm Street • Hartford, CT 06106-5127 portal.ct.gov/DEEP Affirmative Action/Equal Opportunity Employer

Connecticut Department of Energy and Environmental Protection License*

Structures, Dredging & Fill Permit

Licensee(s):	City of Derby c/o Ricardo Rodriguez
Licensee Address(s):	1 Elizabeth Street Derby, CT 06418
License Number(s):	202078550-SDF
Municipality:	Derby
Project Description:	Construction of new fishing platform and associated dolphin pile for public access / recreation
Project Address/Location:	O'Sullivan's Island
Waters:	Housatonic River
Authorizing CT Statute(s) and/or Federal Law:	CGS Section 22a-359 to 363g
Applicable Regulations of CT State Agencies:	N/A
Agency Contact:	Land & Water Resources Division, Bureau of Water Protection & Land Reuse, 860-424-3019
License Expiration:	Five (5) years from the date of issuance of this license.
Project Site Plan Set:	*"O'Sullivan's Island Fishing & Viewing Platform, Derby, Connecticut,"* 22 Sheets, prepared by HRP Associates, and last revised May 2021.
License Enclosures:	Land Record Filing; LWRD Compliance Certification Form; LWRD General Conditions; LWRD Work Commencement Form; Site Plan Set

*Connecticut's Uniform Administrative Procedure Act defines License to include, "*the whole or part of any agency permit, certificate, approval, registration, charter or similar form of permission required by law . . .*"

Authorized Activities:

The Licensee is hereby authorized to conduct the following work as described in application # 202078550 and as depicted on any site plan sheets / sets cited herein:

1. Installation and maintenance of E&S controls.
2. Construction of new 6' x 12' concrete landing pad.
3. Construction of new pier walk (9' wide x ~44' long) to fishing platform.
4. Construction of new fishing platform (16' wide x ~83' long) with appurtenance structures including railings, benches and fish cutting station.
5. Installation of seven (7) new dolphin piles adjacent to the fishing platform.

Failure to comply with the terms and conditions of this license shall subject the Licensee and / or the Licensee's contractor(s) to enforcement actions and penalties as provided by law.

This license is subject to the following Terms and Conditions:

1. **License Enclosure(s) and Conditions.** The Licensee shall comply with all applicable terms and conditions as may be stipulated within the License Enclosure(s) listed above.
2. **Time-of-Year Restrictions.** Work authorized herein is prohibited between April 1st and June 30th, inclusive, in order to protect diadromous fish migration and to avoid disturbance to peregrine falcon (*Falco peregrinus*) nesting / breeding, unless authorized in writing by the Commissioner.
3. **Public Signage.** Licensee shall ensure that public signage / information board is provided at the site for the posting of fish regulations, species restrictions, and fish consumption advisories. The sign board shall be large enough to post at least eight (8) 8.5" x 11" signs and be protected by removable plexiglass or equivalent.
4. **Turbidity Curtain.** Prior to the commencement of work authorized herein, the Licensee shall install turbidity curtains extending from the water surface to the substrate around the work area. Such erosion and sediment control structures shall be maintained in optimal operating condition until project completion at which time the erosion and sediment controls shall be removed to an upland location.
5. **Equipment and Stockpile Location Restriction.** At no time shall equipment or material stockpiles be staged over or within tidal wetland(s) or submerged aquatic vegetation area(s). Stockpiles must be stored in upland areas above the Coastal Jurisdiction Line (CJL).
6. **Barge Storage.** At no time shall any barge be stored over intertidal flats, submerged aquatic vegetation or tidal wetland vegetation or in a location that interferes with navigation. In the event any barge associated with the work authorized herein is grounded, no dragging or prop dredging shall occur to free the barge.
7. **Vessel Restriction.** The Licensee shall ensure that any vessel utilized in the execution of the work authorized herein shall not rest on, or come in contact with, the substrate at any time.

8. **Management of Materials.** Any materials removed from the site shall be managed in accordance with all federal, state, and local requirements, including Chapter 446K Water Pollution Control, Chapter 445 Hazardous Waste, and Chapter 446d Solid Waste of the Connecticut General Statutes.

Issued under the authority of the Commissioner of Energy and Environmental Protection on:

November 5, 2021
Date

Betsey Wingfield
Digitally signed by Betsey Wingfield
Date: 2021.11.05 08:51:47 -04'00'

Betsey Wingfield
Deputy Commissioner
Department of Energy & Environmental Protection

LWRD General Conditions

1. **Land Record Filing (for *Structures Dredging & Fill*, *Tidal Wetlands*, *Certificate of Permission*, and *Long Island Sound General Permit* Licenses only).** The Licensee shall file the Land Record Filing on the land records of the municipality in which the subject property is located not later than thirty (30) days after license issuance pursuant to Connecticut General Statutes (CGS) Section 22a-363g. A copy of the Notice with a stamp or other such proof of filing with the municipality shall be submitted to the Commissioner no later than sixty (60) days after license issuance. If a Land Record Filing form is not enclosed and the work site is not associated with an upland property, no filing is required.

2. **Contractor Notification.** The Licensee shall give a copy of the license and its attachments to the contractor(s) who will be carrying out the authorized activities prior to the start of construction and shall receive a written receipt for such copy, signed and dated by such contractor(s). The Licensee's contractor(s) shall conduct all operations at the site in full compliance with the license and, to the extent provided by law, may be held liable for any violation of the terms and conditions of the license. At the work site, the contractor(s) shall, whenever work is being performed, have on site and make available for inspection a copy of the license and the authorized plans.

3. **Work Commencement[1].** Not later than two (2) weeks prior to the commencement of any work authorized herein, the Licensee shall submit to the Commissioner, on the Work Commencement Form attached hereto, the name(s) and address(es) of all contractor(s) employed to conduct such work and the expected date for commencement and completion of such work, if any.
    - For water diversion activities authorized pursuant to 22a-377(c)-1 of the Regulations of Connecticut State Agencies, the Licensee shall also notify the Commissioner in writing two weeks prior to initiating the authorized diversion.
    - For emergency activities authorized pursuant Connecticut General Statutes Section 22a-6k, the Licensee shall notify the Commissioner, in writing, of activity commencement at least one (1) day prior to construction and of activity completion no later than five (5) days after conclusion.

4. **For Coastal Licenses Only - License Notice.** The Licensee shall post the first page of the License in a conspicuous place at the work area while the work authorized therein is undertaken.

5. **Unauthorized Activities.** Except as specifically authorized, no equipment or material, including but not limited to, fill, construction materials, excavated material or debris, shall be

[1] The Work Commencement condition and the need for a Work Commencement Form is not applicable to Flood Management Certification approvals.

deposited, placed or stored in any wetland or watercourse on or off-site. The Licensee may not conduct work within wetlands or watercourses other than as specifically authorized, unless otherwise authorized in writing by the Commissioner. Tidal wetlands means "wetland" as defined by section 22a-29 and "freshwater wetlands and watercourses" means "wetlands" and "watercourses" as defined by section 22a-38.

6. **Unconfined Instream Work.** Unless otherwise noted in a condition of the license, the following conditions apply to projects in non-coastal waters:
    - Unconfined instream work is limited to the period June 1 through September 30.
    - Confinement of a work area by cofferdam techniques using sand bag placement, sheet pile installation (vibratory method only), portadam, or similar confinement devices is allowed any time of the year. The removal of such confinement devices is allowed any time of the year.
    - Once a work area has been confined, in-water work within the confined area is allowed any time of the year.
    - The confinement technique used shall completely isolate and protect the confined area from all flowing water. The use of silt boom/curtain or similar technique as a means for confinement is prohibited.

7. **For State Actions Only - Material or Equipment Storage in the Floodplain.** Unless approved by a Flood Management Exemption, the storage of any materials at the site which are buoyant, hazardous, flammable, explosive, soluble, expansive, radioactive, or which could in the event of a flood be injurious to human, animal or plant life, below the elevation of the five-hundred (500) year flood is prohibited. Any other material or equipment stored at the site below said elevation by the Licensee or the Licensee's contractor must be firmly anchored, restrained or enclosed to prevent flotation. The quantity of fuel stored below such elevation for equipment used at the site shall not exceed the quantity of fuel that is expected to be used by such equipment in one day. In accordance with the licensee's Flood Contingency Plan, the Licensee shall remove equipment and materials from the floodplain during periods when flood warnings have been issued or are anticipated by a responsible federal, state or local agency. It shall be the Licensee's responsibility to obtain such warnings when flooding is anticipated.

8. **Temporary Hydraulic Facilities for Water Handling.** If not reviewed and approved as a part of the license application, temporary hydraulic facilities shall be designed by a qualified professional and in accordance with the *Connecticut Guidelines for Soil Erosion and Sediment Control*, the *2004 Connecticut Stormwater Quality Manual*, or the *Department of Transportation's ConnDOT Drainage Manual,* as applicable. Temporary hydraulic facilities may include channels, culverts or bridges which are required for haul roads, channel relocations, culvert installations, bridge construction, temporary roads, or detours.

9. **Excavated Materials.** Unless otherwise authorized, all excavated material shall be staged and managed in a manner which prevents additional impacts to wetlands and watercourses.

10. **Best Management Practices.** The Licensee shall not cause or allow pollution of any wetlands or watercourses, including pollution resulting from sedimentation and erosion. In constructing

or maintaining any authorized structure or facility or conducting any authorized activity, or in removing any such structure or facility, the Licensee shall employ best management practices to control storm water discharges, to prevent erosion and sedimentation, and to otherwise prevent pollution of wetlands and other waters of the State. For purposes of the license, "pollution" means "pollution" as that term is defined by CGS section 22a-423. Best Management Practices include, but are not limited, to practices identified in the *Connecticut Guidelines for Soil Erosion and Sediment Control* as revised, *2004 Connecticut Stormwater Quality Manual*, Department of Transportation's *ConnDOT Drainage Manual* as revised, and the Department of Transportation Standard Specifications as revised.

11. **Work Site Restoration.** Upon completion of any authorized work, the Licensee shall restore all areas impacted by construction, or used as a staging area or accessway in connection with such work, to their condition prior to the commencement of such work.

12. **Inspection.** The Licensee shall allow any representative of the Commissioner to inspect the project location at reasonable times to ensure that work is being or has been conducted in accordance with the terms and conditions of this license.

13. **Change of Use. (Applies only if a use is specified within the License "*Project Description*")**

    a. The work specified in the license is authorized solely for the purpose set forth in the license. No change in purpose or use of the authorized work or facilities as set forth in the license may occur without the prior written approval of the Commissioner. The Licensee shall, prior to undertaking or allowing any change in use or purpose from that which is authorized by this license, request permission from the Commissioner for such change. Said request shall be in writing and shall describe the proposed change and the reason for the change.

    b. A change in the form of ownership of any structure authorized herein from a rental/lease commercial marina to a wholly-owned common interest community or dockominium may constitute a change in purpose as specified in paragraph (a) above.

14. **De Minimis Alteration.** The Licensee shall not deviate from the authorized activity without prior written approval from the Commissioner. The Licensee may request a de minimis change to any authorized structure, facility, or activity. A de minimis alteration means a change in the authorized design, construction or operation that individually and cumulatively has minimal additional environmental impact and does not substantively alter the project as authorized.

    - For diversion activities authorized pursuant to 22a-377(c)-2 of the Regulations of Connecticut State Agencies, a de minimis alteration means an alteration which does not significantly increase the quantity of water diverted or significantly change the capacity to divert water.

15. **Extension Request.** The Licensee may request an extension of the license expiration date. Such request shall be in writing and shall be submitted to the Commissioner at least thirty (30) days prior to the license expiration. Such request shall describe the work done to date, what work still needs to be completed, and the reason for such extension. It shall be the Commissioner's sole discretion to grant or deny such request.

16. **Compliance Certification.** Not later than 90 days after completion of the authorized work, the Licensee shall prepare and submit to the Commissioner the attached Compliance Certification Form. Such Compliance Certification shall be completed, signed, and sealed by the Licensee and a Connecticut Licensed Design Professional. If non-compliance is indicated on the form, or the Commissioner has reason to believe the activities and/or structures were conducted in non-compliance with the license, the Commissioner may require the Licensee to submit as-built plans as a condition of this license.

17. **Maintenance.** The Licensee shall maintain all authorized structures or work in optimal condition or shall remove such structures or facility and restore the affected waters to their pre-work condition. Any such maintenance or removal activity shall be conducted in accordance with applicable law and any additional approvals required by law.

18. **No Work After License Expiration.** Work conducted after the license expiration date is a violation of the license and may subject the licensee to enforcement action, including penalties, as provided by law.

19. **License Transfer.** The license is not transferable without prior written authorization of the Commissioner. A request to transfer a license shall be submitted in writing and shall describe the proposed transfer and the reason for such transfer. The Licensee's obligations under the license shall not be affected by the passage of title to the license site to any other person or municipality until such time as a transfer is approved by the Commissioner.

20. **Document Submission.** Any document required to be submitted to the Commissioner under the license or any contact required to be made with the Commissioner shall, unless otherwise specified in writing by the Commissioner, be directed to:

    Regulatory Section
    Land & Water Resources Division
    Department of Energy and Environmental Protection
    79 Elm Street
    Hartford, Connecticut 06106-5127
    860-424-3019

21. **Date of Document Submission.** The date of submission to the Commissioner of any document required by the license shall be the date such document is received by the Commissioner. The date of any notice by the Commissioner under the license, including but not limited to notice of approval or disapproval of any document or other action, shall be the date such notice is personally delivered or the date three (3) days after it is mailed by the Commissioner, whichever is earlier. Except as otherwise specified in the license, the word "day" as used in the license means calendar day. Any document or action which is required by the license to be submitted or performed by a date which falls on a Saturday, Sunday or a Connecticut or federal holiday shall be submitted or performed on or before the next day which is not a Saturday, Sunday, or a Connecticut or federal holiday.

22. **Certification of Documents.** Any document, including but not limited to any notice, which is required to be submitted to the Commissioner under the license shall be signed by the Licensee and by the individual or individuals responsible for actually preparing such

document, each of whom shall certify in writing as follows: "I have personally examined and am familiar with the information submitted in this document and all attachments and certify that based on reasonable investigation, including my inquiry of those individuals responsible for obtaining the information, the submitted information is true, accurate and complete to the best of my knowledge and belief, and I understand that any false statement made in this document or its attachments may be punishable as a criminal offense."

23. Accuracy of Documentation. In evaluating the application for the license, the Commissioner has relied on information and data provided by the Licensee and on the Licensee's representations concerning site conditions, design specifications and the proposed work, including but not limited to representations concerning the commercial, public or private nature of the work or structures, the water-dependency of said work or structures, its availability for access by the general public, and the ownership of regulated structures or filled areas. If such information proves to be false, deceptive, incomplete or inaccurate, the license may be modified, suspended or revoked, and any unauthorized activities may be subject to enforcement action.

24. Limits of Liability. In granting the license, the Commissioner has relied on all representations of the Licensee, including information and data provided in support of the Licensee's application. Neither the Licensee's representations nor the issuance of the license shall constitute an assurance by the Commissioner as to the structural integrity, the engineering feasibility or the efficacy of such design.

25. Reporting of Violations. In the event that the Licensee becomes aware that they did not or may not comply, or did not or may not comply on time, with any provision of this license or of any document incorporated into the license, the Licensee shall immediately notify the agency contact specified within the license and shall take all reasonable steps to ensure that any noncompliance or delay is avoided or, if unavoidable, is minimized to the greatest extent possible. In so notifying the agency contact, the Licensee shall provide, for the agency's review and written approval, a report including the following information:

a. the provision(s) of the license that has been violated;

b. the date and time the violation(s) was first observed and by whom;

c. the cause of the violation(s), if known;

d. if the violation(s) has ceased, the duration of the violation(s) and the exact date(s) and times(s) it was corrected;

e. if the violation(s) has not ceased, the anticipated date when it will be corrected;

f. steps taken and steps planned to prevent a reoccurrence of the violation(s) and the date(s) such steps were implemented or will be implemented; and

g. the signatures of the Licensee and of the individual(s) responsible for actually preparing such report.

If the violation occurs outside of normal business hours, the Licensee shall contact the Department of Energy and Environmental Protection Emergency Dispatch at 860-424-3333. The Licensee shall comply with any dates which may be approved in writing by the

Commissioner.

26. **Revocation/Suspension/Modification.** The license may be revoked, suspended, or modified in accordance with applicable law.

27. **Other Required Approvals.** License issuance does not relieve the Licensee of their obligations to obtain any other approvals required by applicable federal, state and local law.

28. **Rights.** The license is subject to and does not derogate any present or future property rights or powers of the State of Connecticut, and conveys no property rights in real estate or material nor any exclusive privileges, and is further subject to any and all public and private rights and to any federal, state or local laws or regulations pertinent to the property or activity affected hereby.

29. **Condition Conflicts.** In the case where a project specific special condition listed on the license differs from, or conflicts with, one of the general conditions listed herein, the project specific special condition language shall prevail. It is the licensee's responsibility to contact the agency contact person listed on the license for clarification if needed prior to conducting any further regulated activities.

SITE LOCATION MAP
SCALE: 1" = 1000'

SEPTEMBER 2020
REVISED MAY 2021

O'SULLIVAN'S ISLAND FISHING & VIEWING PLATFORM

DERBY, CONNECTICUT

HRP PROJECT NO. NAU3003.CE

PERMIT PHASE FOR REFERENCE ONLY

GENERAL NOTES

1. ALL DIMENSIONS, ELEVATIONS, AND EXISTING CONDITIONS SHALL BE FIELD VERIFIED BY THE CONTRACTOR PRIOR TO CONSTRUCTION. ANY DISCREPANCIES DISCOVERED DURING THE COURSE OF CONSTRUCTION SHALL BE PROMPTLY REPORTED TO THE ENGINEER.
2. THE CONTRACTOR IS RESPONSIBLE FOR DETERMINING, PRIOR TO BIDDING, THE LOCATIONS OF ALL UTILITIES AND SHALL BE RESPONSIBLE FOR ALL DAMAGE TO SAID UTILITIES. THE CONTRACTOR SHALL CONTACT "CALL BEFORE YOU DIG" (1-800-922-4455), AT LEAST 72 HOURS PRIOR TO STARTING CONSTRUCTION. THE CONTRACTOR SHALL COORDINATE ACTIVITIES WITH INDIVIDUAL UTILITY COMPANIES.
3. THE CONTRACTOR IS RESPONSIBLE FOR ENSURING THAT PROPER STORM DRAINAGE IS MAINTAINED THROUGHOUT CONSTRUCTION.
4. ALL SOIL EROSION AND SEDIMENT CONTROL MEASURES SHALL BE INSPECTED AND MAINTAINED ON A REGULAR BASIS AS OUTLINED HEREIN. INSPECTION AND MAINTENANCE SHALL BE CARRIED OUT THROUGHOUT THE CONSTRUCTION PERIOD UNTIL ALL DISTURBED AREAS ARE STABILIZED WITH VEGETATION OR PAVING. THE MINIMUM INSPECTION PERIOD SHALL BE WEEKLY AND AFTER MAJOR STORMS.
5. CONSTRUCTION ACTIVITIES SHALL CONFORM TO APPLICABLE SECTIONS OF THE TOWN OF DERBY STANDARDS AND APPLICABLE SECTIONS OF THE CONNECTICUT DEPARTMENT OF TRANSPORTATION "STANDARD SPECIFICATIONS FOR ROADS, BRIDGES, AND INCIDENTAL CONSTRUCTION," FORM 818, AS AMENDED.
6. NO IN-WATER WORK SHALL BE PERMITTED FROM APRIL 1 TO JUNE 30, INCLUSIVE.
7. FOLLOWING COMPLETION OF CONSTRUCTION, AN AS-BUILT SURVEY SHALL BE PERFORMED AND SUBMITTED TO OWNER AND ENGINEER.

SHEET INDEX

SHEET	TITLE / DESCRIPTION	CREATED	REVISED
	TITLE SHEET	09/16/2020	03/31/2021
E1.0	OVERALL EXISTING CONDITIONS PLAN	09/16/2020	03/31/2021
E1.1	EXISTING CONDITIONS PLAN	09/16/2020	03/31/2021
E1.2	EXISTING CONDITIONS PLAN	09/16/2020	03/31/2021
C1.0	OVERALL SITE LAYOUT PLAN	09/16/2020	12/10/2020
C1.1	SITE LAYOUT PLAN	09/16/2020	05/21/2021
C1.2	SITE LAYOUT PLAN	09/16/2020	12/10/2020
C1.3	CROSS SECTION VIEW	09/16/2020	
C2.1	GRADING PLAN	09/16/2020	03/31/2021
C3.1	SOIL EROSION AND SEDIMENT CONTROL PLAN	09/16/2020	03/31/2021
C3.2	SOIL EROSION AND SEDIMENT CONTROL NOTES & DETAILS	09/16/2020	12/04/2020
C4.1	SITE ACCESS PLAN	09/16/2020	
C5.1 - C5.5	DETAILS	09/16/2020	
C5.6 - C5.8	DETAILS	12/10/2020	
C5.9 - C5.10	DETAILS	05/14/2021	

Prepared By:

HRP
MOVE YOUR ENVIRONMENT FORWARD

197 SCOTT SWAMP ROAD
FARMINGTON, CT 06032
(860) 674-9570
HRPASSOCIATES.COM

Prepared For:

NAUGATUCK VALLEY
COUNCIL OF GOVERNMENTS

DRAWING NAME: J:\N\NAUCO - NAUGATUCK VALLEY COUNCIL OF GOVERNMENTS\O'SULLIVAN ISLAND DERBY, CT\NAU3003CE\CAD\E1.1 EXISTING CONDITIONS.dwg LAYOUT: E1.0 OVERALL EXISTING CONDITIONS PLAN PLOT DATE: May 24, 2021 - 11:17am OPERATOR: EJDR

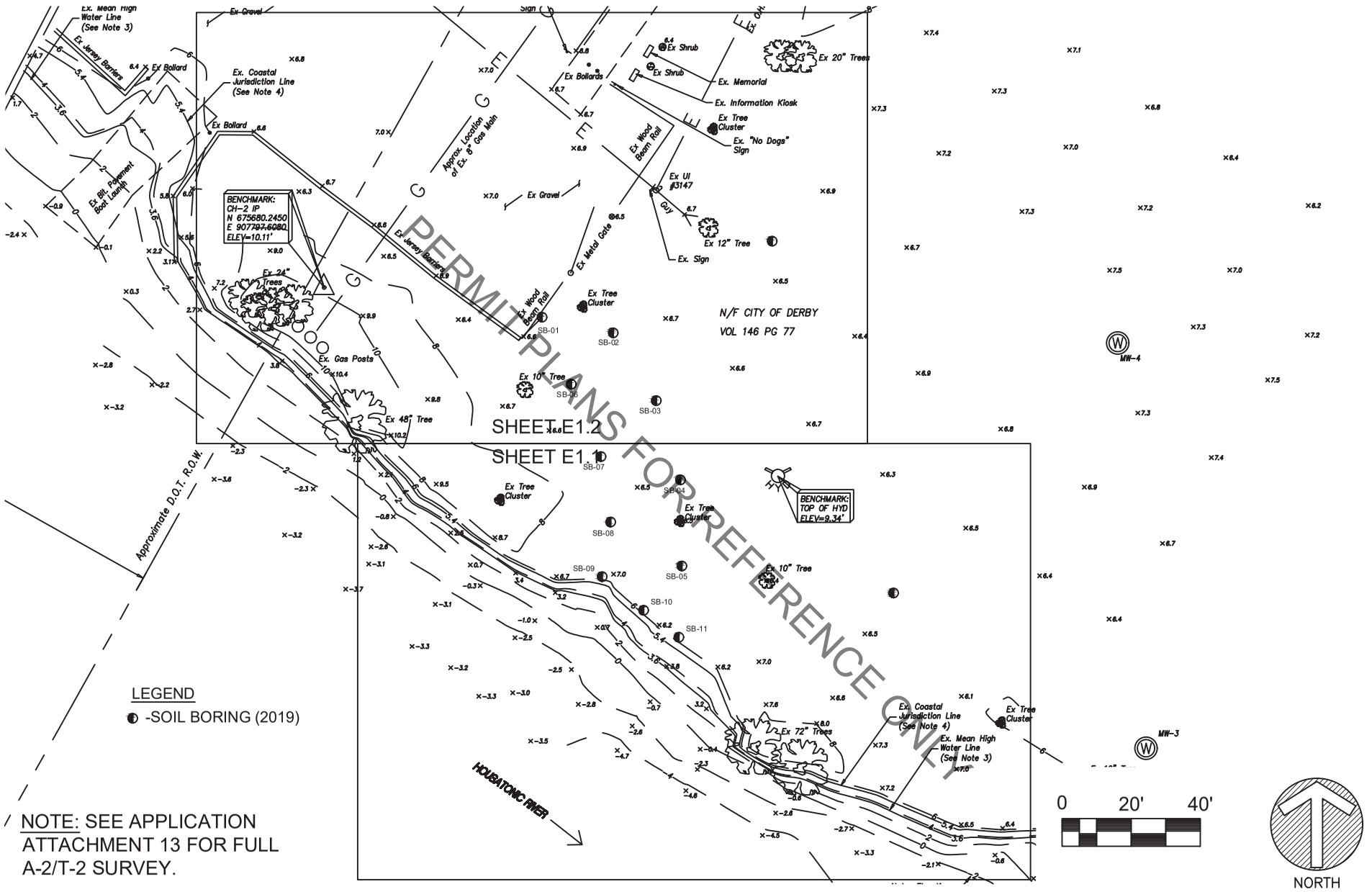

HRP
MOVE YOUR ENVIRONMENT FORWARD
197 SCOTT SWAMP ROAD
FARMINGTON, CT 06032
(860) 674-9570
HRPASSOCIATES.COM

OVERALL EXISTING CONDITIONS PLAN

O'SULLIVAN'S ISLAND FISHING & VIEWING PLATFORM

DERBY, CONNECTICUT

SCALE:	1" = 40'
ISSUE DATE:	09/16/2020
PROJECT NUMBER:	NAU3003.CE
SHEET NO.	E1.0

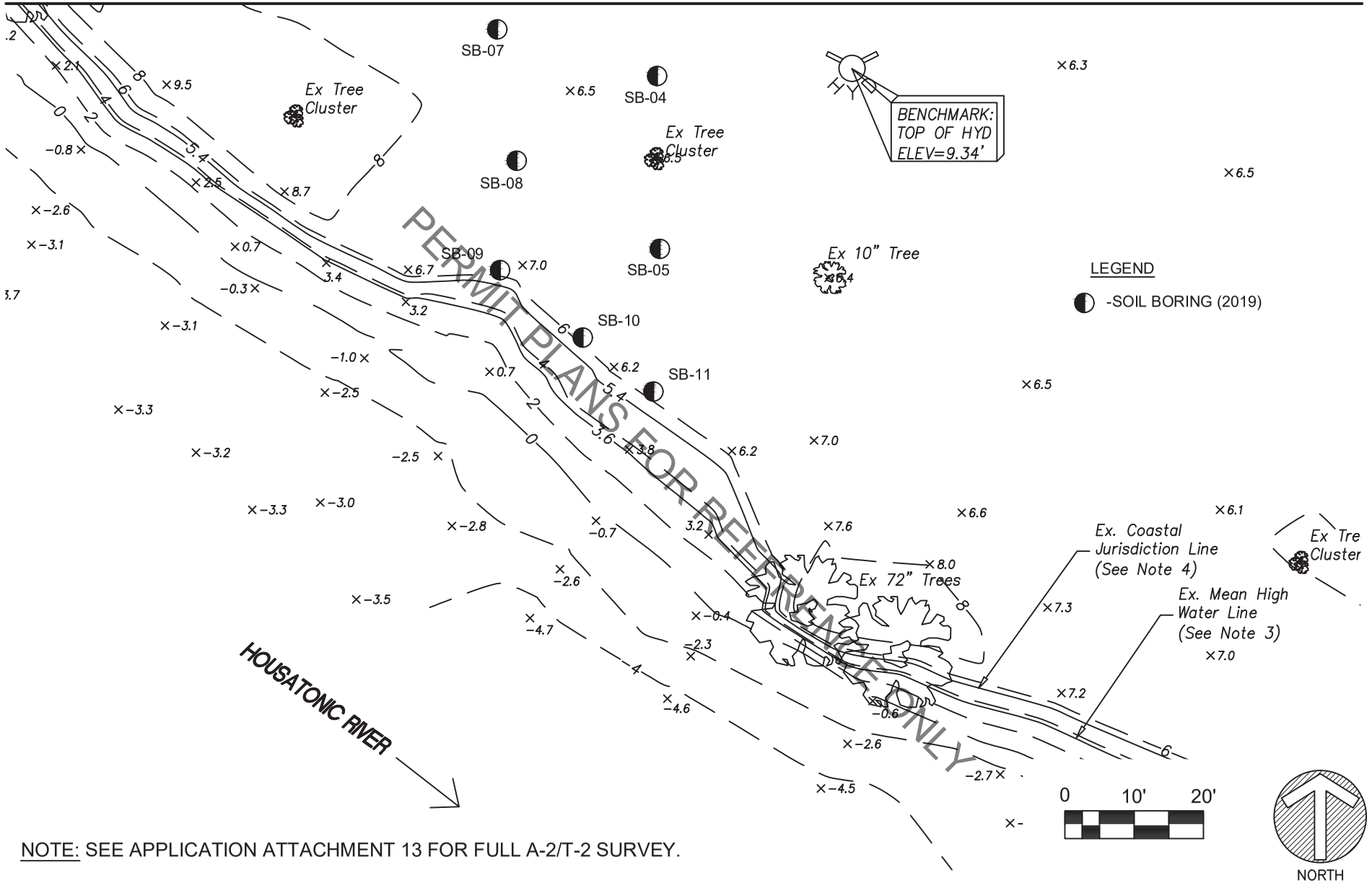

NOTE: SEE APPLICATION ATTACHMENT 13 FOR FULL A-2/T-2 SURVEY.

HRP
MOVE YOUR ENVIRONMENT FORWARD
197 SCOTT SWAMP ROAD
FARMINGTON, CT 06032
(860) 674-9570
HRPASSOCIATES.COM

EXISTING CONDITIONS PLAN

O'SULLIVAN'S ISLAND FISHING & VIEWING PLATFORM

DERBY, CONNECTICUT

SCALE:	1" = 20'
ISSUE DATE:	09/16/2020
PROJECT NUMBER:	NAU3003.CE
SHEET NO.	E1.1

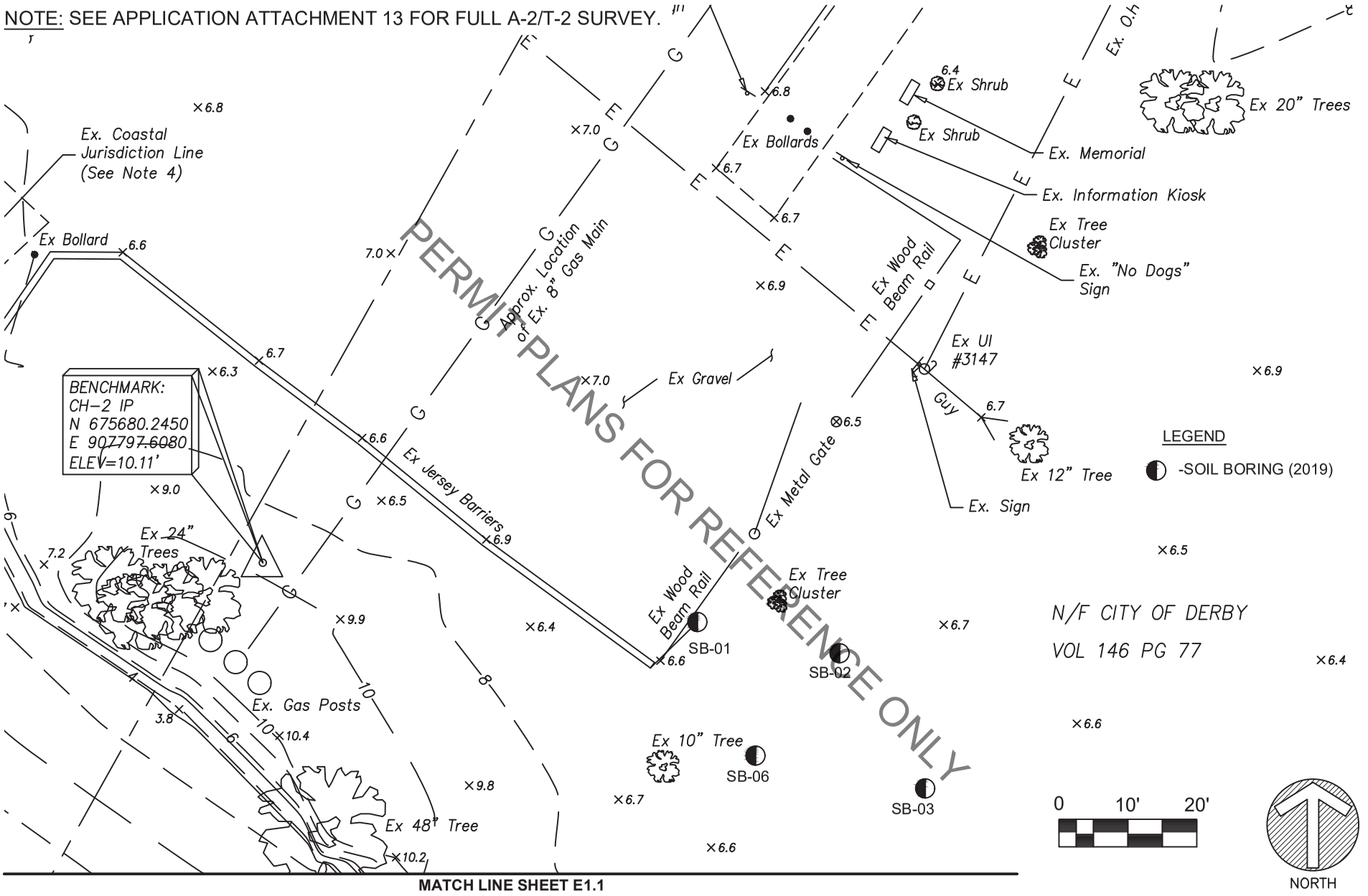

HRP
MOVE YOUR ENVIRONMENT FORWARD
197 SCOTT SWAMP ROAD
FARMINGTON, CT 06032
(860) 674-9570
HRPASSOCIATES.COM

EXISTING CONDITIONS PLAN

O'SULLIVAN'S ISLAND FISHING & VIEWING PLATFORM

DERBY, CONNECTICUT

SCALE:	1" = 20'
ISSUE DATE:	09/16/2020
PROJECT NUMBER:	NAU3003.CE
SHEET NO.	E1.2

DRAWING NAME: J:\N\NAUCO - NAUGATUCK VALLEY COUNCIL OF GOVERNMENTS\O'SULLIVAN ISLAND DERBY, CT\NAU3003CE\CAD\C1.1 SITE LAYOUT PLAN.dwg LAYOUT: C1.0 OVERALL SITE LAYOUT PLAN PLOT DATE: May 24, 2021 - 11:17am OPERATOR: EJDR

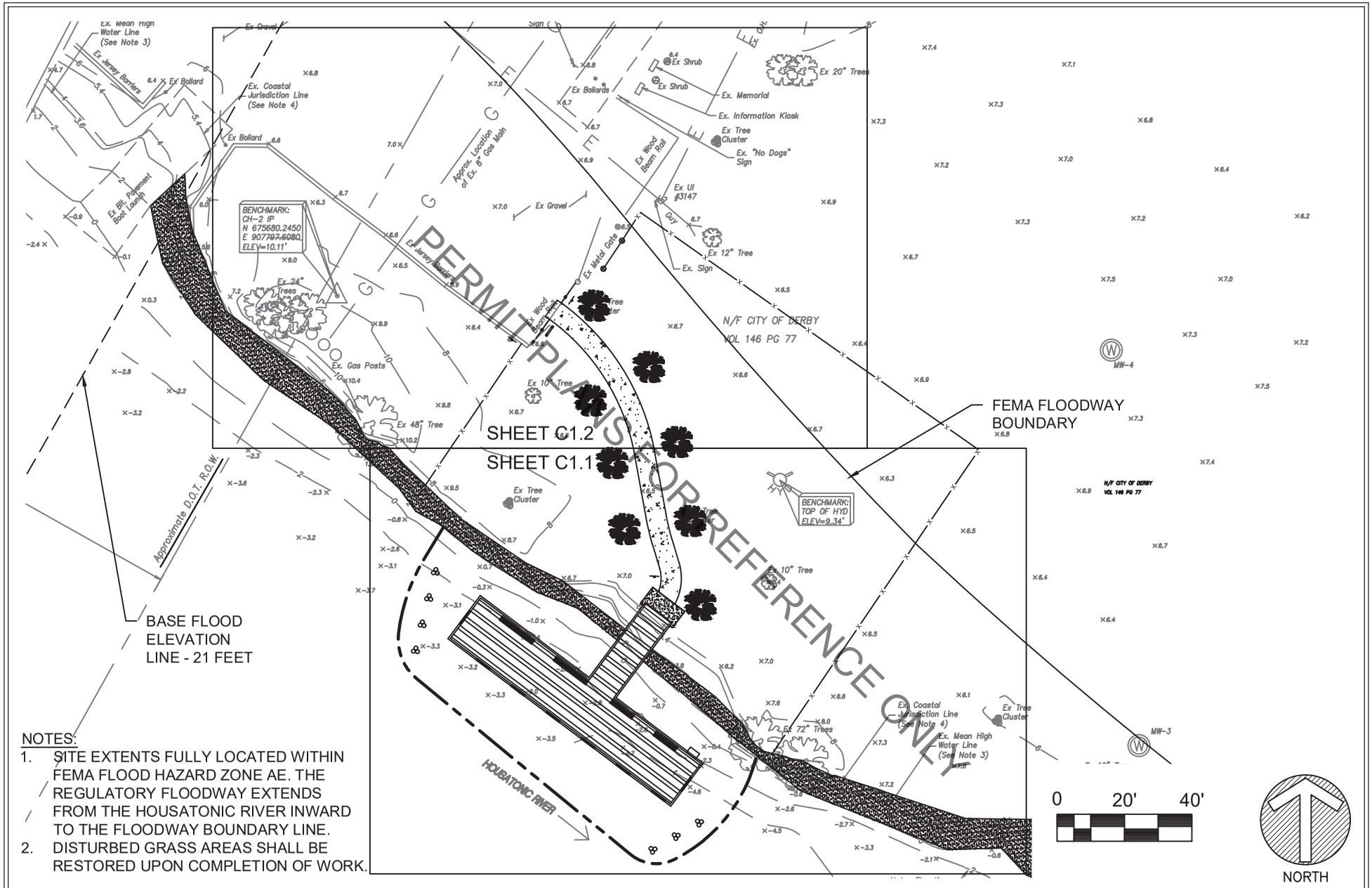

NOTES:

1. SITE EXTENTS FULLY LOCATED WITHIN FEMA FLOOD HAZARD ZONE AE. THE REGULATORY FLOODWAY EXTENDS FROM THE HOUSATONIC RIVER INWARD TO THE FLOODWAY BOUNDARY LINE.
2. DISTURBED GRASS AREAS SHALL BE RESTORED UPON COMPLETION OF WORK.

HRP
MOVE YOUR ENVIRONMENT FORWARD
197 SCOTT SWAMP ROAD
FARMINGTON, CT 06032
(860) 674-9570
HRPASSOCIATES.COM

OVERALL SITE LAYOUT PLAN

O'SULLIVAN'S ISLAND FISHING & VIEWING PLATFORM

DERBY, CONNECTICUT

SCALE:	1" = 40'
ISSUE DATE:	09/16/2020
PROJECT NUMBER:	NAU3003.CE
SHEET NO.	C1.0

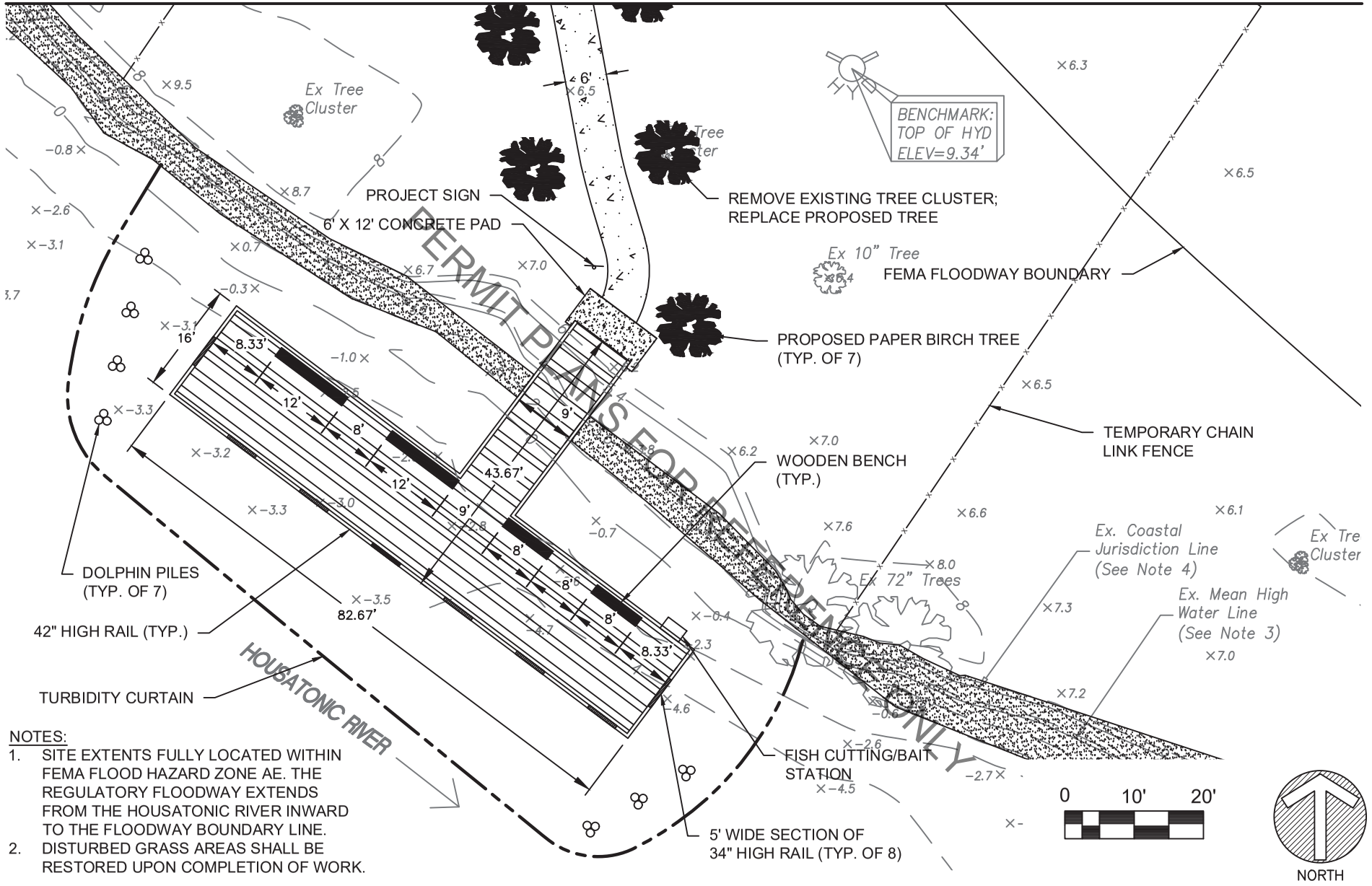

NOTES:
1. SITE EXTENTS FULLY LOCATED WITHIN FEMA FLOOD HAZARD ZONE AE. THE REGULATORY FLOODWAY EXTENDS FROM THE HOUSATONIC RIVER INWARD TO THE FLOODWAY BOUNDARY LINE.
2. DISTURBED GRASS AREAS SHALL BE RESTORED UPON COMPLETION OF WORK.

HRP
MOVE YOUR ENVIRONMENT FORWARD
197 SCOTT SWAMP ROAD
FARMINGTON, CT 06032
(860) 674-9570
HRPASSOCIATES.COM

SITE LAYOUT PLAN

O'SULLIVAN'S ISLAND FISHING & VIEWING PLATFORM

DERBY, CONNECTICUT

SCALE:	1" = 20'
ISSUE DATE:	09/16/2020
PROJECT NUMBER:	NAU3003.CE
SHEET NO.	C1.1

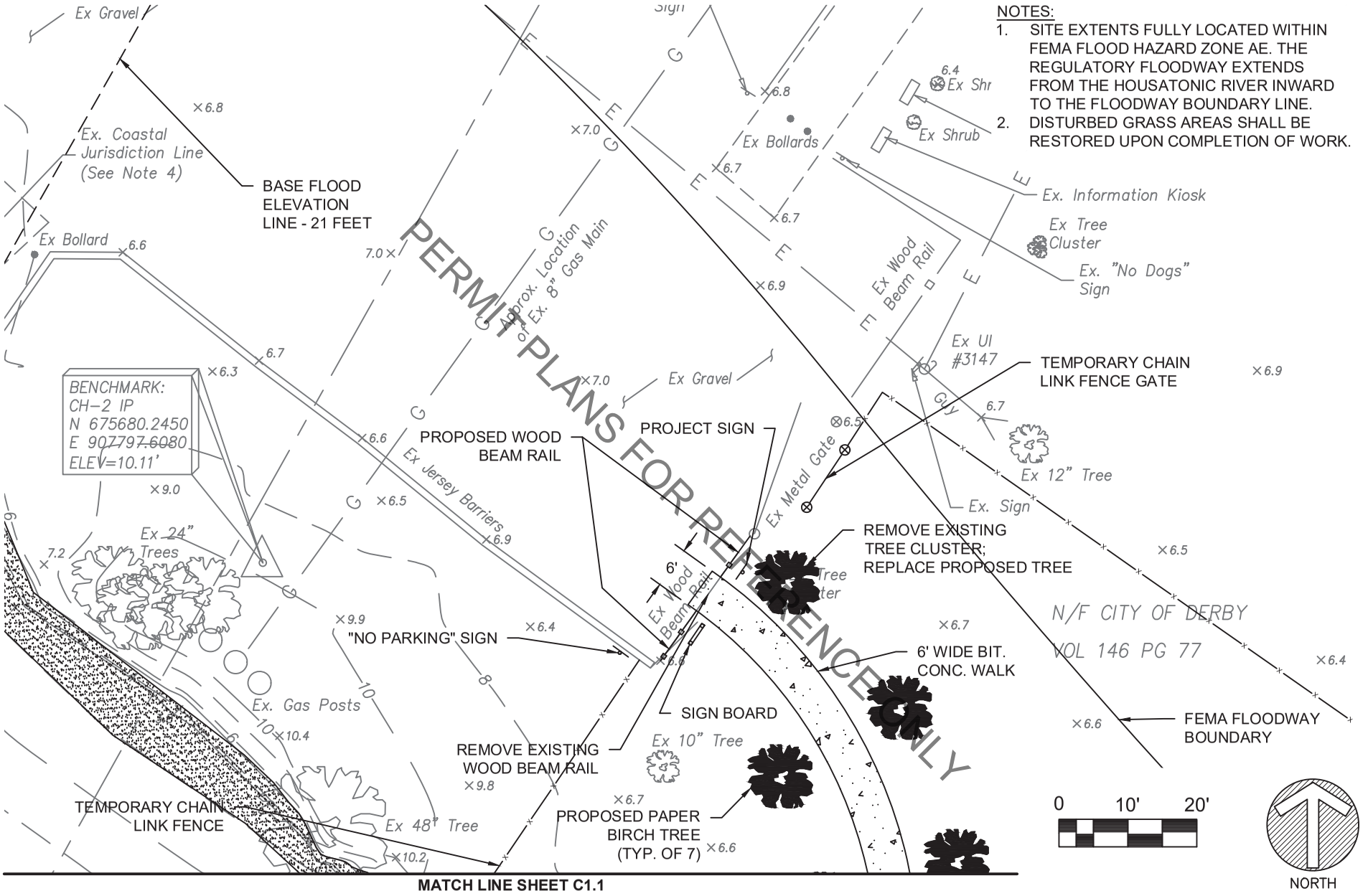

HRP
MOVE YOUR ENVIRONMENT FORWARD
197 SCOTT SWAMP ROAD
FARMINGTON, CT 06032
(860) 674-9570
HRPASSOCIATES.COM

SITE LAYOUT PLAN

O'SULLIVAN'S ISLAND FISHING & VIEWING PLATFORM

DERBY, CONNECTICUT

SCALE:	1" = 20'
ISSUE DATE:	09/16/2020
PROJECT NUMBER:	NAU3003.CE
SHEET NO.	C1.2

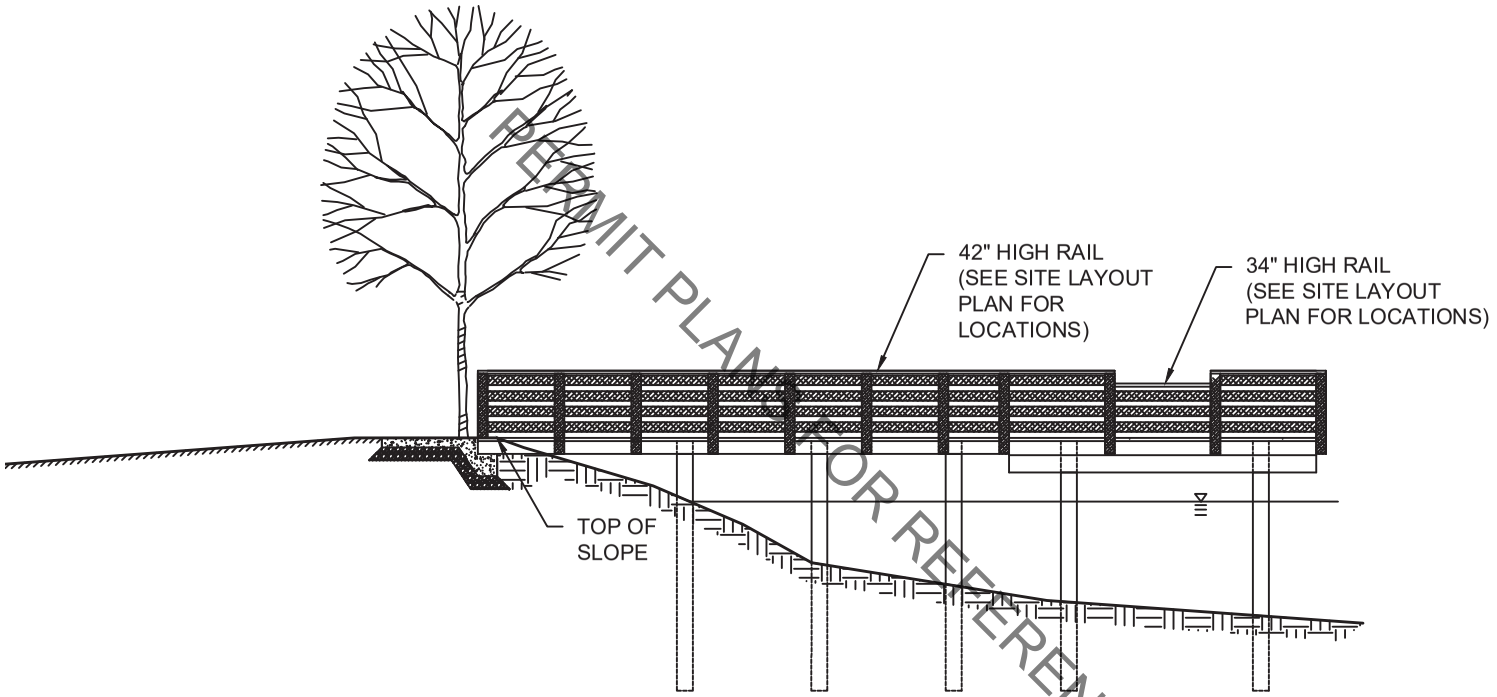

PERMIT PLANS FOR REFERENCE ONLY

NOTE: SEE DETAIL SHEET C5.4 FOR DOCK PLATFORM ELEVATION VIEW.

0 5' 10'

NORTH

HRP
MOVE YOUR ENVIRONMENT FORWARD
197 SCOTT SWAMP ROAD
FARMINGTON, CT 06032
(860) 674-9570
HRPASSOCIATES.COM

SITE LAYOUT CROSS SECTION VIEW

O'SULLIVAN'S ISLAND FISHING & VIEWING PLATFORM

DERBY, CONNECTICUT

SCALE:	1" = 10'
ISSUE DATE:	09/16/2020
PROJECT NUMBER:	NAU3003.CE
SHEET NO.	C1.3

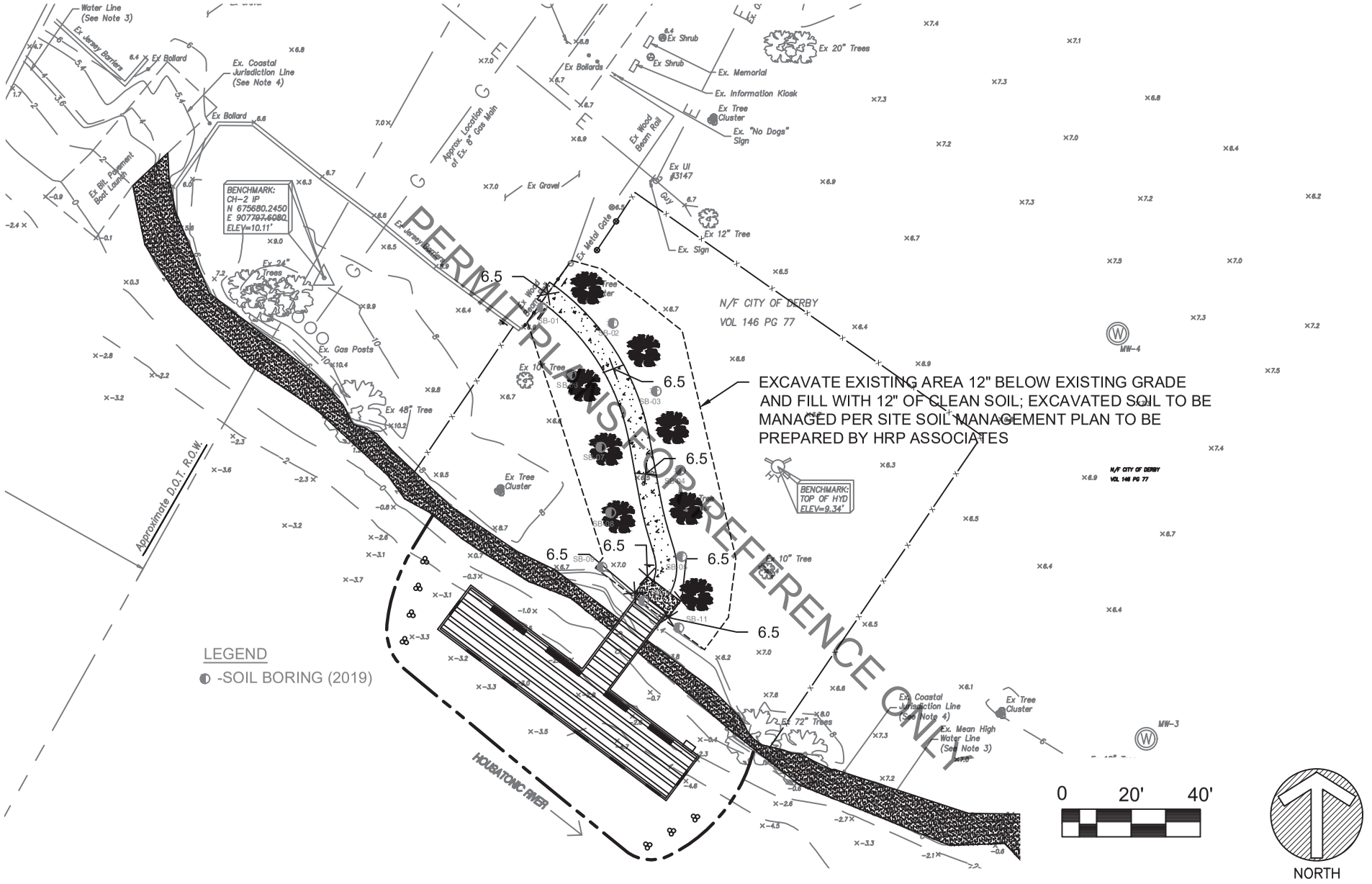

HRP
MOVE YOUR ENVIRONMENT FORWARD
197 SCOTT SWAMP ROAD
FARMINGTON, CT 06032
(860) 674-9570
HRPASSOCIATES.COM

GRADING PLAN

O'SULLIVAN'S ISLAND FISHING & VIEWING PLATFORM

DERBY, CONNECTICUT

SCALE:	1" = 40'
ISSUE DATE:	09/16/2020
PROJECT NUMBER:	NAU3003.CE
SHEET NO.	C2.1

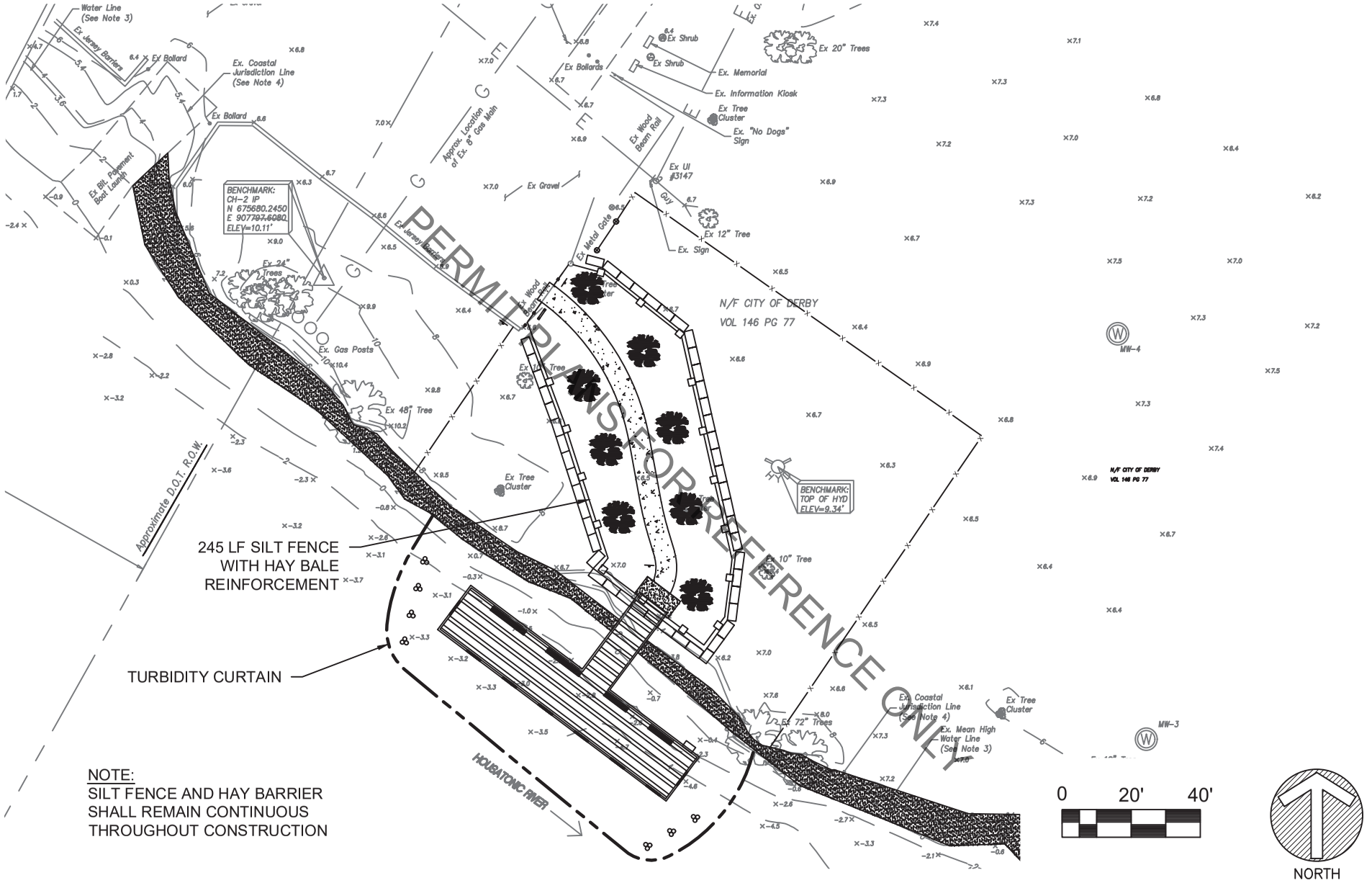

NOTE:
SILT FENCE AND HAY BARRIER SHALL REMAIN CONTINUOUS THROUGHOUT CONSTRUCTION

HRP
MOVE YOUR ENVIRONMENT FORWARD
197 SCOTT SWAMP ROAD
FARMINGTON, CT 06032
(860) 674-9570
HRPASSOCIATES.COM

SOIL EROSION AND SEDIMENT CONTROL PLAN

O'SULLIVAN'S ISLAND FISHING & VIEWING PLATFORM

DERBY, CONNECTICUT

SCALE:	1" = 40'
ISSUE DATE:	09/16/2020
PROJECT NUMBER:	NAU3003.CE
SHEET NO.	C3.1

GENERAL

THE PLAN PROPOSES EROSION CONTROL MEASURES TO ADEQUATELY CONTROL ACCELERATED EROSION AND SEDIMENTATION AND REDUCE THE DANGER FROM STORM WATER RUNOFF AT THE SITE. THE RUNOFF SHALL BE CONTROLLED BY THE INTERCEPTION, DIVERSION, AND SAFE DISPOSAL OF PRECIPITATION. RUNOFF SHALL ALSO BE CONTROLLED BY STAGING CONSTRUCTION ACITIVITY AND PRESERVING NATURAL VEGETATION WHENEVER POSSIBLE.

EXISTING VEGETATION SHALL BE PROTECTED AND ONLY THAT CLEARING AND GRUBBING ABSOLUTELY NECESSARY FOR THE PROPOSED CONSTRUCTION SHALL BE PERFORMED. ALL DISTUBED AREAS SHALL BE RESTORED TO THEIR ORIGINAL CONDITION AND CONTOUR, UNLESS OTHERWISE INDICATED ON THE PLANS. THE CONTRACTOR SHALL TAKE A SPECIAL CARE WITH HIS CONSTRUCTION METHODS AND SHALL COMPLY WITH THE FOLLOWING GUIDELINES.

REFERENCE IS MADE TO THE 2002 "CONNECTICUT GUIDELINES FOR SOIL EROSION AND SEDIMENT CONTROL", AS AMENDED. THE GUIDELINES ARE OBTAINABLE FROM THE CONNECTICUT COUNCIL ON SOIL AND WATER CONSERVATION, STATE OFFICE BUILDING, HARTFORD, CONNECTICUT, AND SHOULD BE USED AS A REFERENCE IN CONSTRUCTING THE EROSION AND SEDIMENT CONTROLS INDICATED ON THESE PLANS.

SEDIMENTATION CONTROL

ALL AREAS SHALL BE PROTECTED FROM SEDIMENTATION DURING AND AFTER CONSTRUCTION, PARTICULARLY THE STORAGE OF EXCAVATED OR STOCKPILED MATERIAL. THE CONTRACTOR SHALL CAREFULLY STRIP ALL TOPSOIL, LOAM, OR ORGANIC MATTER PRIOR TO TRENCHING OR OTHER OPERATION, AND SHALL STORE THEM SEPARATELY FROM ALL OTHER MATERIALS DURING EXCAVATION. EACH STOCKPILE MUST BE ADEQUATELY RINGED WITH SEDIMENT CONTROL MATERIAL (I.E. HAY BALES AND/OR GEOTEXTILE).

EROSION CONTROL PLAN

SEDIMENTATION CONTROL SYSTEM - THE SEDIMENTATION CONTROL SYSTEM SHALL CONSIST OF SILT FENCE WITH HAY BALE REINFORCEMENT.

SILT FENCE WITH HAYBALE BACKING - THE SEDIMENTATION CONTROL SYSTEM SHALL BE INSTALLED IMMEDIATELY AFTER A CUT SLOPE HAS BEEN GRADED, BEFORE A FILL SLOPE HAS BEEN CREATED AND AS INDICATED ON THE PLANS. THE SYSTEM IS DESIGNED TO INTERCEPT SILT AND SEDIMENT BEFORE IT REACHES THE WETLAND AREAS, OR WATERCOURSES. DEPOSITS OF SEDIMENT AND SILT ARE TO BE PERIODICALLY REMOVED FOR THE UPSTREAM SIDE OF THE FENCE AND HAYBALES. THIS MATERIAL IS TO BE SPREAD AND STABILIZED IN AREAS NOT SUBJECT TO EROSION, OR IN AREAS WHICH ARE NOT TO BE PAVED OR BUILT ON. THE SEDIMENTATION CONTROL SYSTEM AREAS IS TO BE REPLACED AS NECESSARY TO PROVIDE PROPER FILTERING ACTION. THE SYSTEM IS TO REMAIN IN PLACE AND BE MAINTAINED TO INSURE EFFICIENT SILTATION CONTROL UNTIL ALL AREAS ABOVE THE FENCE ARE STABILIZED AND VEGETATION HAS BEEN ESTABLISHED.

IN ALL AREAS, REMOVAL OF TREES, BUSHES AND OTHER VEGETATION, AND DISTURBANCE OF THE SOIL, IS TO BE KEPT TO AN ABSOLUTE MINIMUM WHILE ALLOWING PROPER DEVELOPMENT OF THE SITE.

DURING CONSTRUCTION, AS SMALL AN AREA OF SOIL AS POSSIBLE SHOULD BE EXPOSED FOR AS SHORT A TIME AS POSSIBLE. AFTER CONSTRUCTION, GRADE, RESPREAD TOPSOIL, AND STABLIZE SOIL BY SEEDING AND MULCHING SO AS TO PREVENT EROSION.

SEDIMENTATION AND EROSION CONTROL MAINTENANCE PROCEDURES

ALL SEDIMENTATION AND EROSION CONTROL DEVICES SHALL BE INSPECTED DURING CONSTRUCTION ON A WEEKLY BASIS, AND FOLLOWING ALL STORMS, BY THE ENGINEER. THE CONTRACTOR SHALL MAINTAIN AND MAKE REPAIRS AND REMOVE SEDIMENT AS REQUESTED BY THE ENGINEER. THIS WORK SHALL BE PERFORMED WITH 24 HOURS OF THE REQUEST AND THERE SHALL BE NO SEPARATE PAYMENT FOR THIS WORK.

THE CONTRACTOR SHALL SWEEP ADJACENT ROADWAYS AS REQUIRED OR REQUESTED BY THE ENGINEER. FOLLOWING COMPLETION OF CONSTRUCTION, THE CONTRACTOR SHALL REPAIR ALL ERODED AREAS AND ENSURE A GOOD STAND OF TURF IS ESTABLISHED THROUGHOUT. THE CONTRACTOR SHALL REPAIR ALL ERODED OR DISPLACED RIPRAP, AND CLEAN SEDIMENT COVERED STONES.

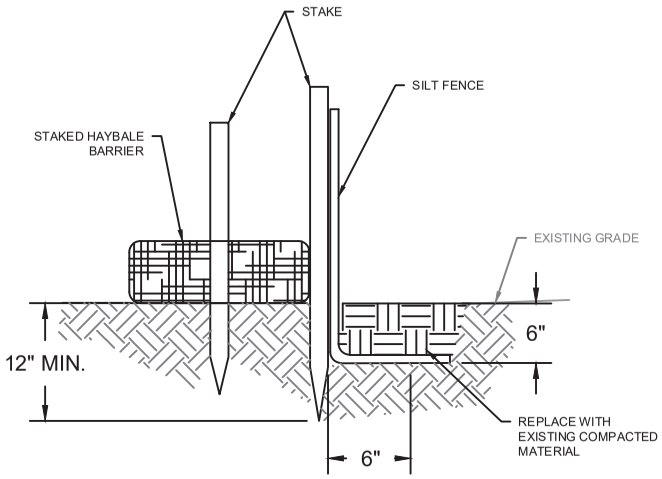

SILT FENCE BACKED BY STAKED HAYBALES

NOT TO SCALE

PERMIT PLANS FOR REFERENCE ONLY

HRP
MOVE YOUR ENVIRONMENT FORWARD
197 SCOTT SWAMP ROAD
FARMINGTON, CT 06032
(860) 674-9570
HRPASSOCIATES.COM

SOIL EROSION AND SEDIMENT CONTROL NOTES AND DETAILS

O'SULLIVAN'S ISLAND FISHING & VIEWING PLATFORM

DERBY, CONNECTICUT

SCALE:	N.T.S.
ISSUE DATE:	09/16/2020
PROJECT NUMBER:	NAU3003.CE
SHEET NO.	C3.2

DRAWING NAME: J:\N\NAUCO - NAUGATUCK VALLEY COUNCIL OF GOVERNMENTS\O'SULLIVAN ISLAND DERBY, CT\NAU3003CE\CAD\C4.I SITE ACCESS PLAN.dwg LAYOUT: C4.I SITE ACCESS PLAN PLOT DATE: May 24, 2021 - 11:18am
OPERATOR: EJDR

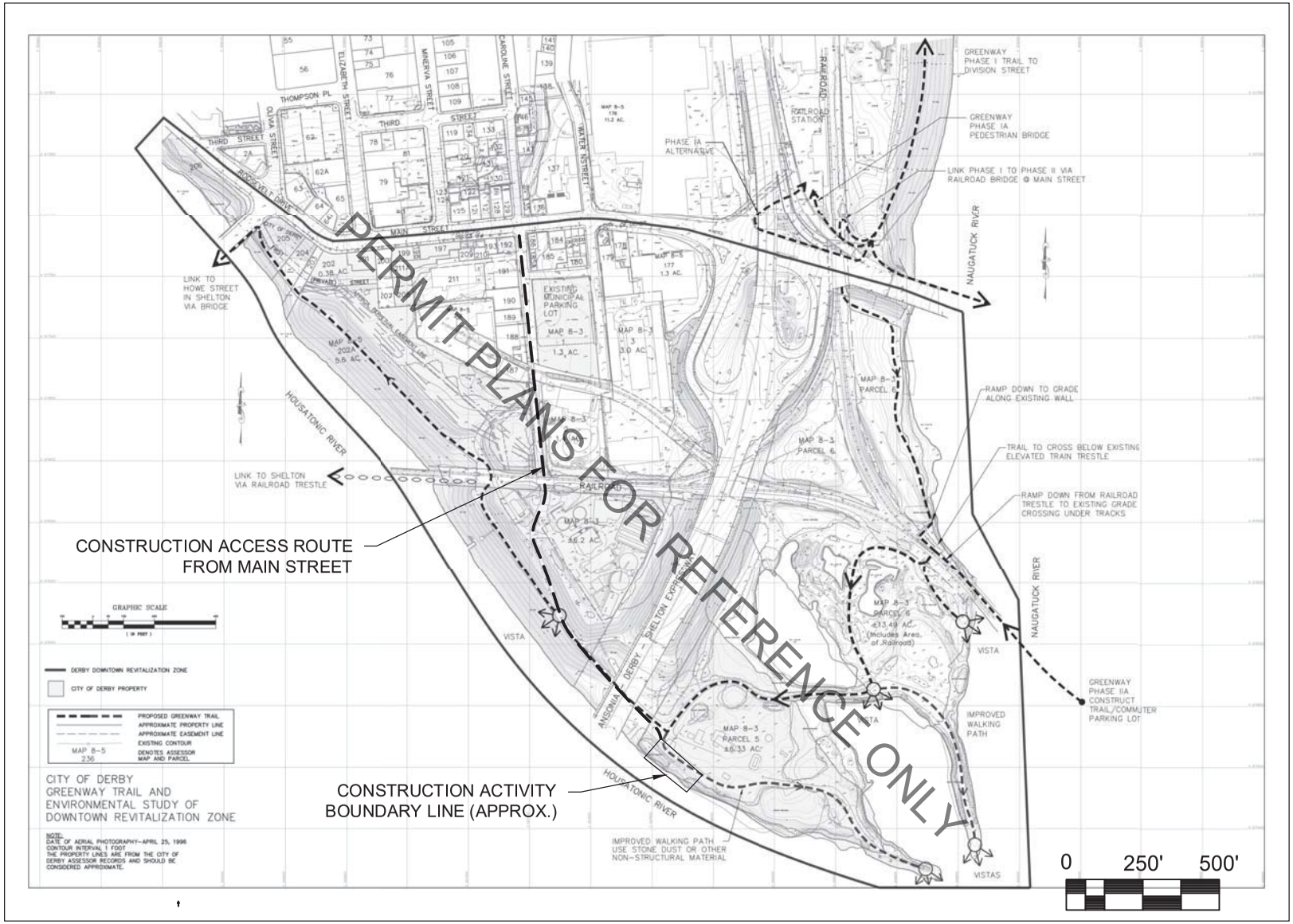

HRP
MOVE YOUR ENVIRONMENT FORWARD
197 SCOTT SWAMP ROAD
FARMINGTON, CT 06032
(860) 674-9570
HRPASSOCIATES.COM

SITE ACCESS PLAN

O'SULLIVAN'S ISLAND FISHING & VIEWING PLATFORM

DERBY, CONNECTICUT

SCALE:	1" = 500'
ISSUE DATE:	09/16/2020
PROJECT NUMBER:	NAU3003.CE
SHEET NO.	C4.1

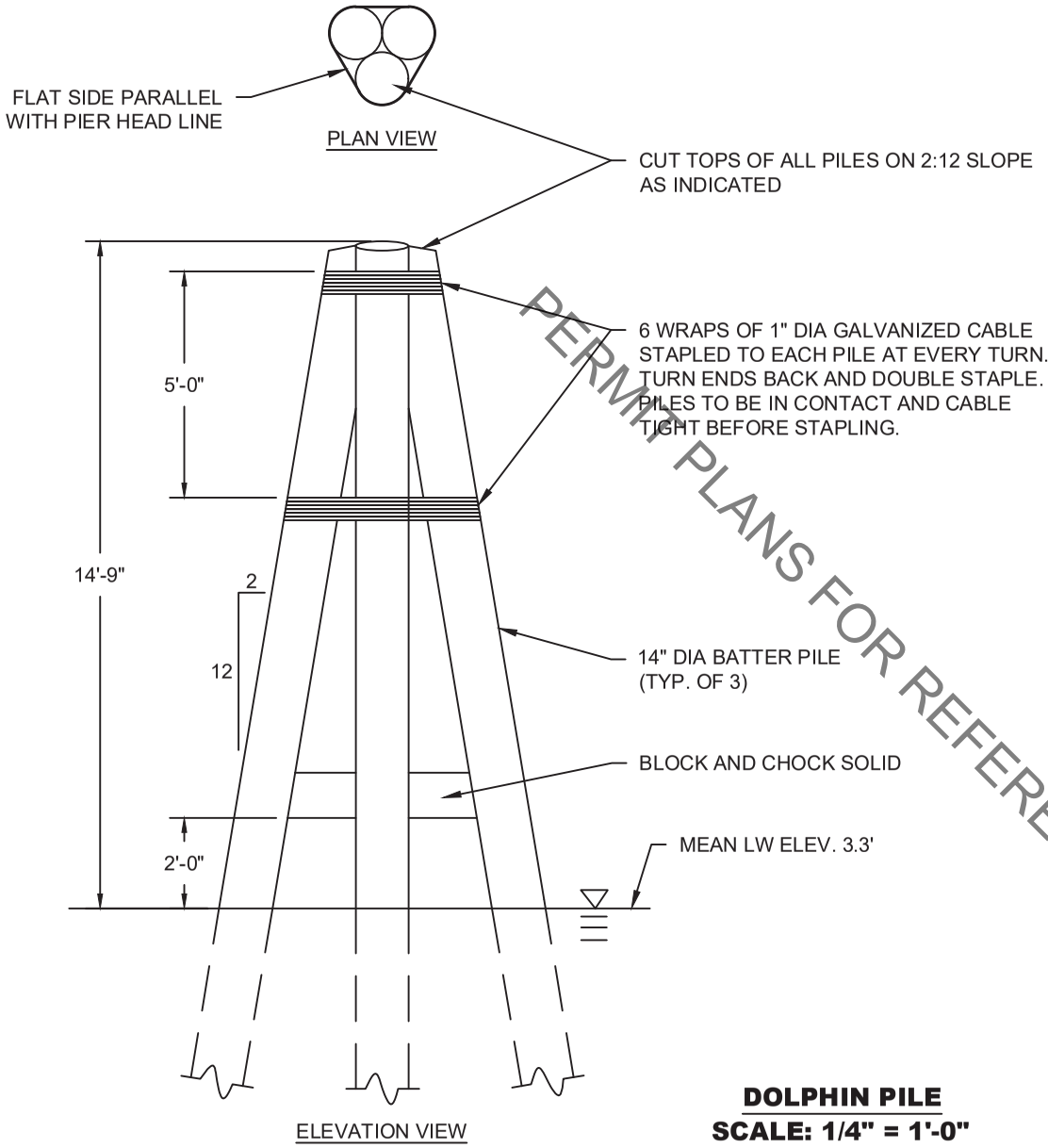

DOLPHIN PILE
SCALE: 1/4" = 1'-0"

PERMIT PLANS FOR REFERENCE ONLY

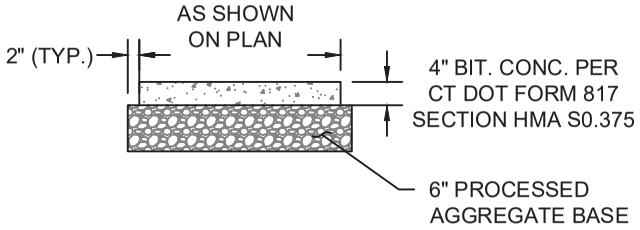

BITUMINOUS CONCRETE WALK
NOT TO SCALE

HRP
MOVE YOUR ENVIRONMENT FORWARD
197 SCOTT SWAMP ROAD
FARMINGTON, CT 06032
(860) 674-9570
HRPASSOCIATES.COM

DETAILS

O'SULLIVAN'S ISLAND FISHING
& VIEWING PLATFORM

DERBY, CONNECTICUT

SCALE:	AS NOTED
ISSUE DATE:	09/16/2020
PROJECT NUMBER:	NAU3003.CE
SHEET NO.	C5.1

PROJECT NOTES AND SPECIFICATIONS:

1. ALL HARDWARE TO BE HOT DIPPED GALVANIZED.
2. PRESSURE TREAT PILE CAP BEAMS AND STRINGERS TO 0.60 PCF CCA.
3. PRESSURE TREAT DECKING TO 0.15 PCF COPPER AZAL.
4. PRESSURE TREATMENT / LUMBER SUPPLY CALL RANDY KELLY AT KOPPERS 908 400 8862.
5. BOLTS 3/4"ø HOT DIPPED GALVANIZED.
6. ANGLE 8X4X$\frac{7}{16}$" HOT DIPPED GALVANIZED.
7. CONCRETE 4000 PSI 5–7% AIR, 4" SLUMP, BROOM FINISH.
8. EPOXY COATED A615 REBAR.
9. ALL REINFORCING STEEL TO HAVE 2" MIN. CONCRETE COVER.
10. PROVIDE FIXED DOLPHINS UPSTREAM.
11. PROVIDE RAILING SYSTEM CAPABLE OF RESISTING 200 POUND POINT LOAD IN ANY DIRECTION AND 50 PSF UNIFORM LOAD.

PIER LAYOUT - PLAN VIEW
SCALE: 1/10" = 1'-0"

NOTE: SEE DETAILS SHEETS C5.3–C5.4 FOR SECTION VIEWS.

PERMIT PLANS FOR REFERENCE ONLY

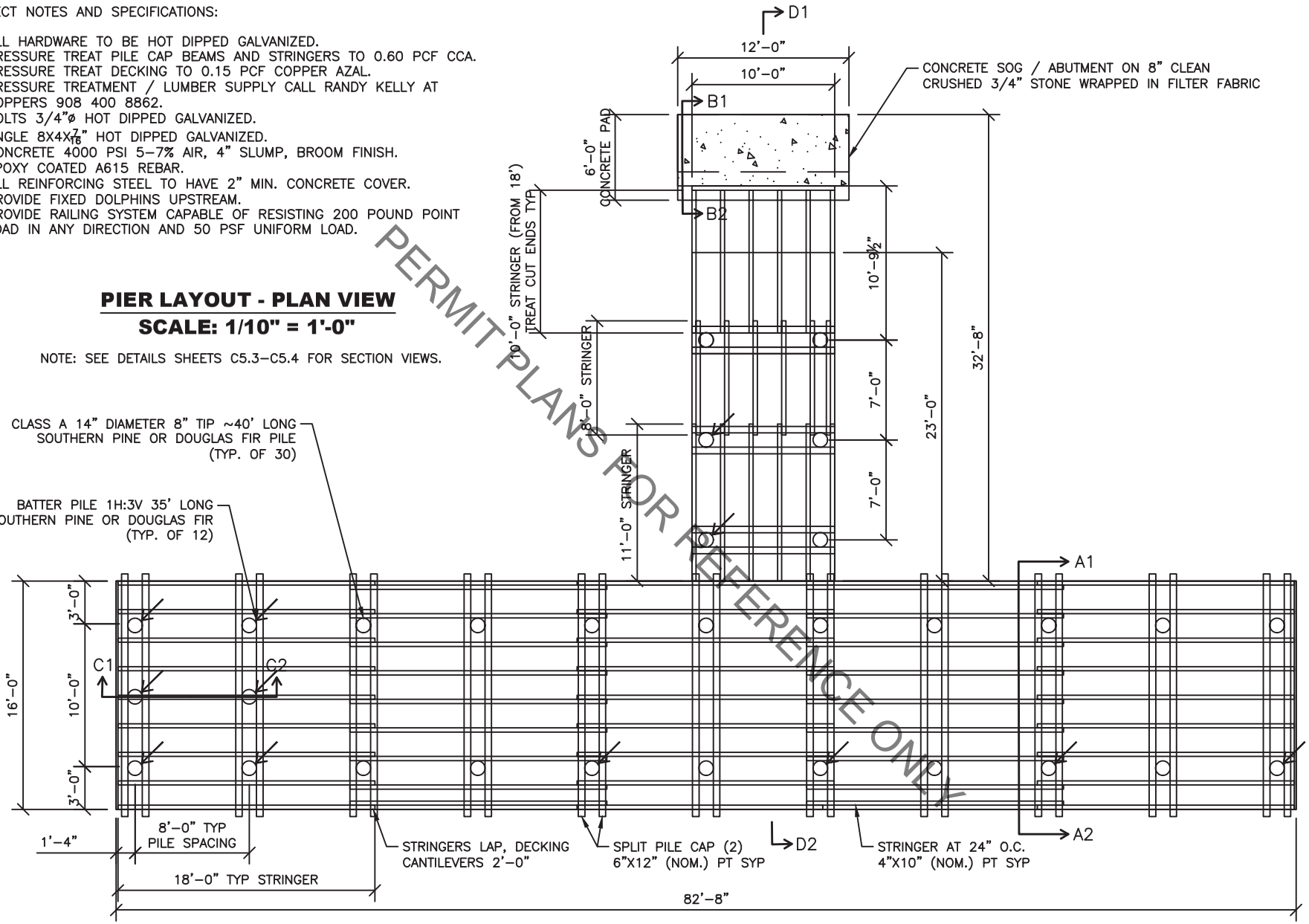

HRP
MOVE YOUR ENVIRONMENT FORWARD
197 SCOTT SWAMP ROAD
FARMINGTON, CT 06032
(860) 674-9570
HRPASSOCIATES.COM

DETAILS

O'SULLIVAN'S ISLAND FISHING & VIEWING PLATFORM

DERBY, CONNECTICUT

SCALE:	AS NOTED
ISSUE DATE:	09/16/2020
PROJECT NUMBER:	NAU3003.CE
SHEET NO.	C5.2

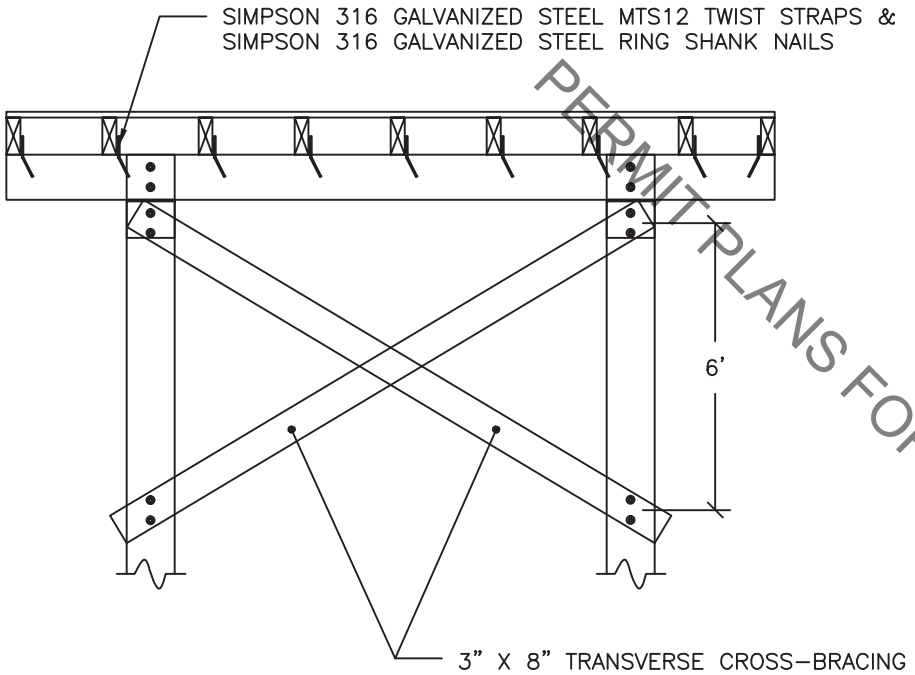

NOTE: LONGITUDINAL BRACING SIMILAR IN DETAIL TO TRANSVERSE BRACING

BRACING & STRINGER TO PILE CAP CONNECTION A1-A2
SCALE: 1/4" = 1'-0"

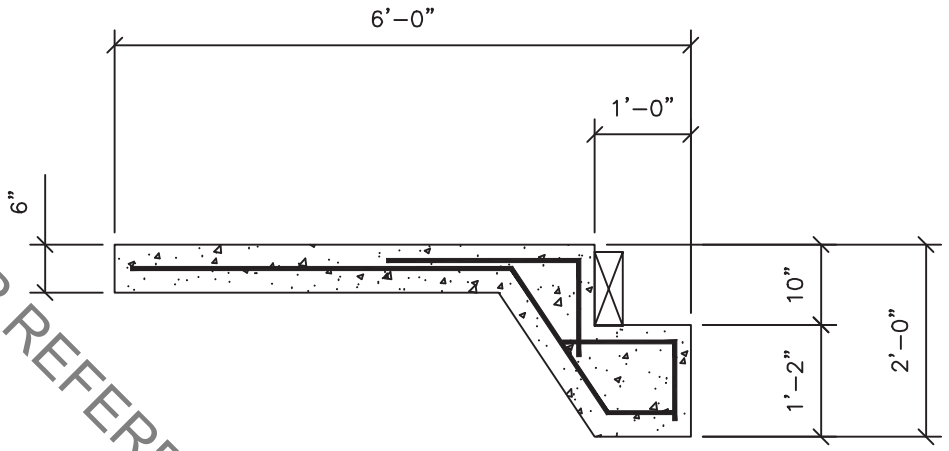

PROFILE VIEW SECTION B1-B2
SCALE: 1/2" = 1'-0"

PERMIT PLANS FOR REFERENCE ONLY

HRP
MOVE YOUR ENVIRONMENT FORWARD
197 SCOTT SWAMP ROAD
FARMINGTON, CT 06032
(860) 674-9570
HRPASSOCIATES.COM

DETAILS

O'SULLIVAN'S ISLAND FISHING
& VIEWING PLATFORM

DERBY, CONNECTICUT

SCALE:	AS NOTED
ISSUE DATE:	09/16/2020
PROJECT NUMBER:	NAU3003.CE

C5.3
SHEET NO.

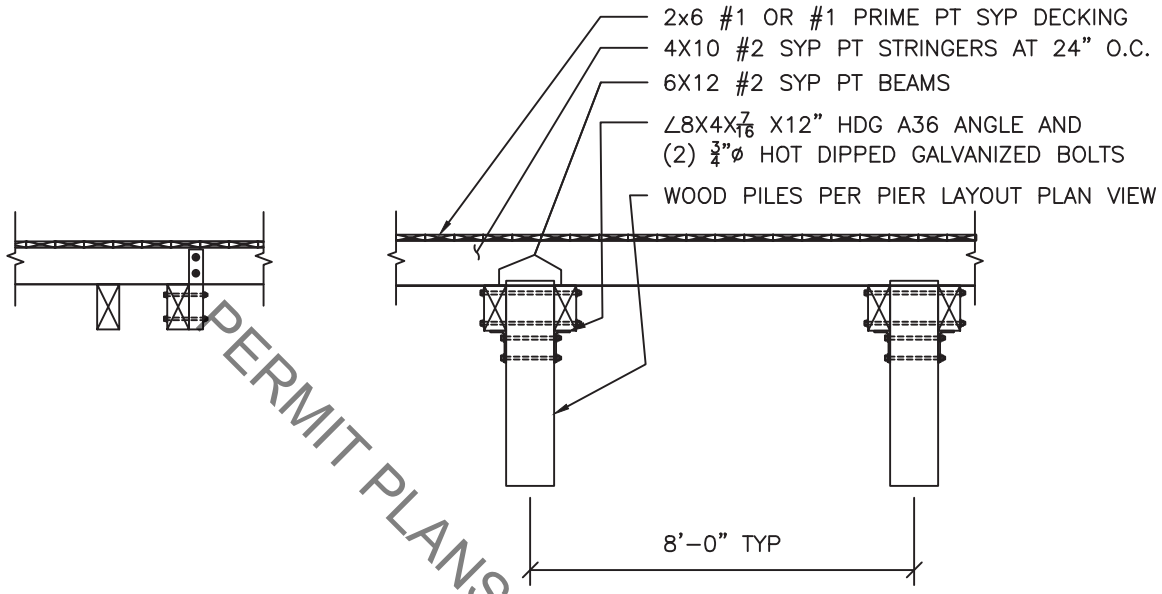

PROFILE VIEW SECTION C1-C2
SCALE: 1/4" = 1'-0"

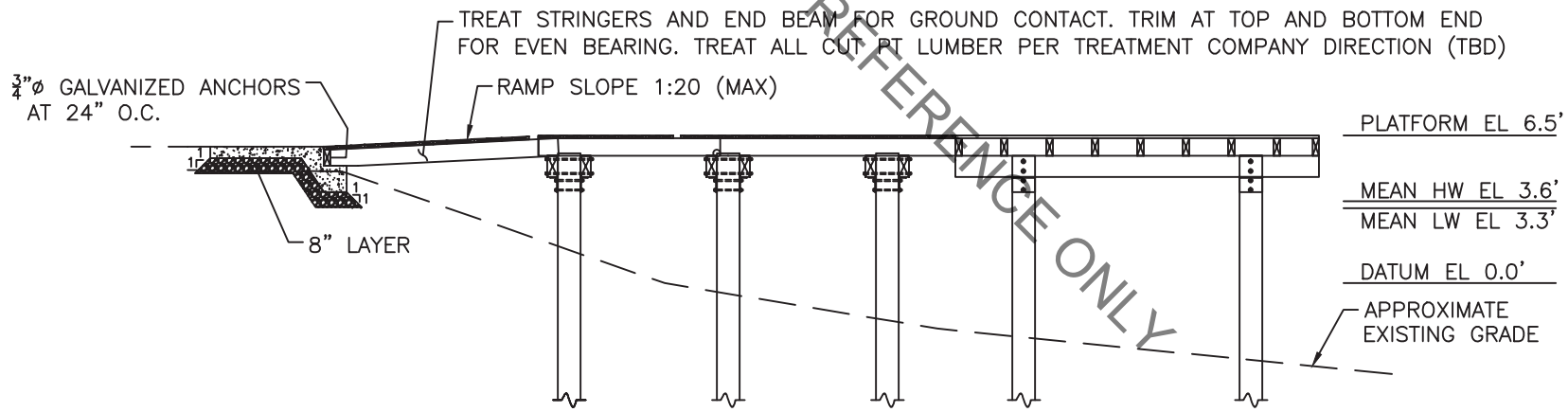

ELEVATION VIEW SECTION D1-D2
SCALE: 1/8" = 1'-0"

PERMIT PLANS FOR REFERENCE ONLY

HRP
MOVE YOUR ENVIRONMENT FORWARD
197 SCOTT SWAMP ROAD
FARMINGTON, CT 06032
(860) 674-9570
HRPASSOCIATES.COM

DETAILS

O'SULLIVAN'S ISLAND FISHING & VIEWING PLATFORM

DERBY, CONNECTICUT

SCALE:	AS NOTED
ISSUE DATE:	09/16/2020
PROJECT NUMBER:	NAU3003.CE

C5.4
SHEET NO.

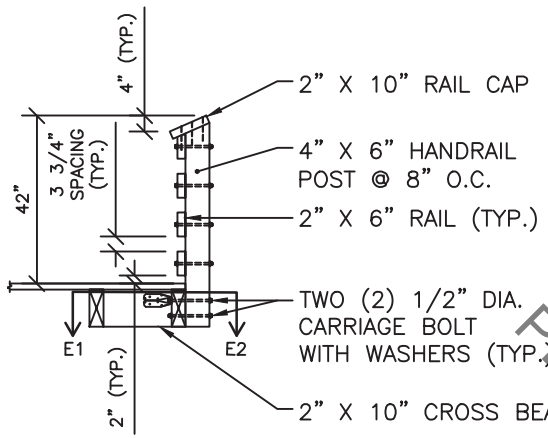

34" HIGH RAIL
SECTION VIEW

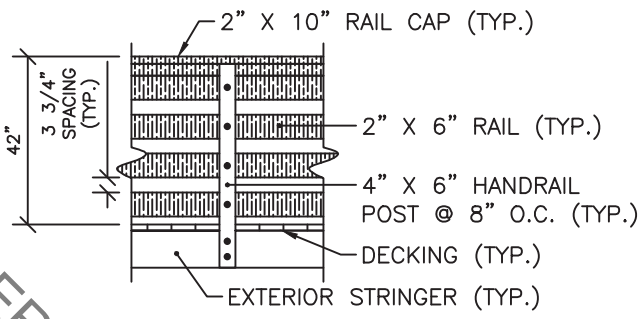

42" HIGH RAIL
ELEVATION VIEW

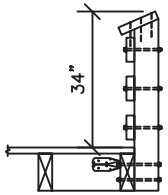

34" HIGH RAIL
SECTION VIEW

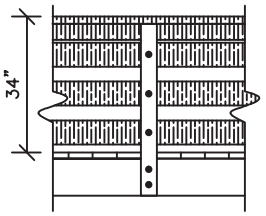

34" HIGH RAIL
ELEVATION VIEW

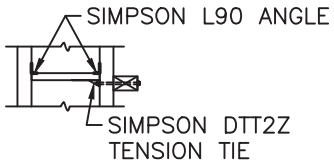

SECTION E1–E2
PLAN VIEW

DECK RAILING DETAILS
SCALE: 1/4" = 1'-0"

NOTE: SEE SITE LAYOUT PLAN SHEET C1.1 FOR 42" HIGH RAIL AND 34" HIGH RAIL LOCATIONS.

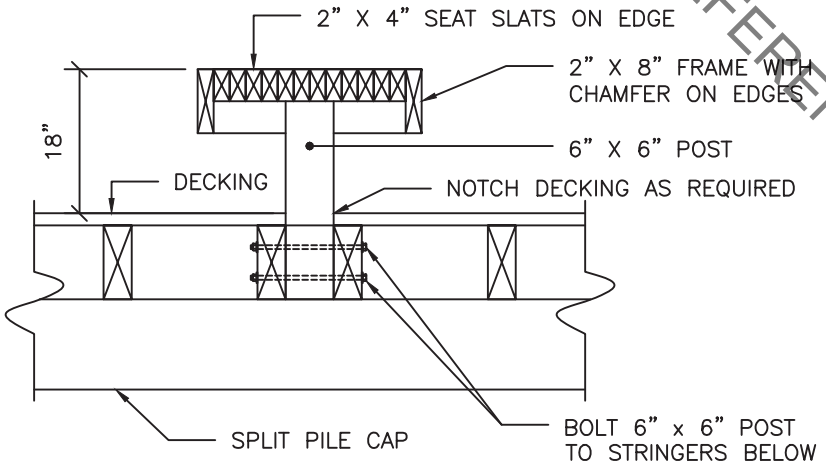

BENCH DETAIL
SCALE: 1/2" = 1'-0"

NOTE: SEE SITE LAYOUT PLAN SHEET C1.1 FOR BENCH LOCATIONS.

PERMIT PLANS FOR REFERENCE ONLY

HRP
MOVE YOUR ENVIRONMENT FORWARD
197 SCOTT SWAMP ROAD
FARMINGTON, CT 06032
(860) 674-9570
HRPASSOCIATES.COM

DETAILS

O'SULLIVAN'S ISLAND FISHING & VIEWING PLATFORM

DERBY, CONNECTICUT

SCALE:	AS NOTED
ISSUE DATE:	09/16/2020
PROJECT NUMBER:	NAU3003.CE

SHEET NO. **C5.5**

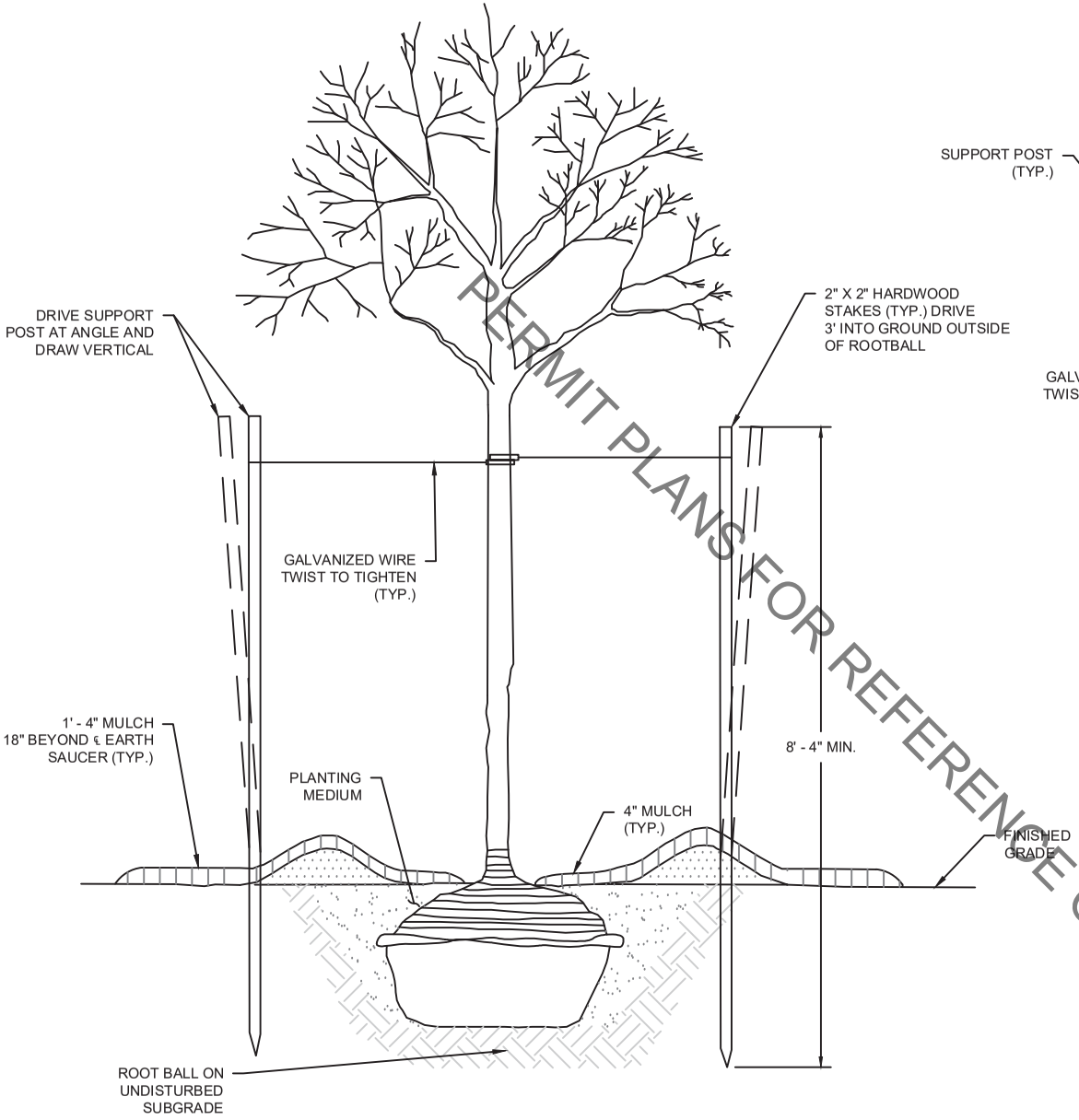

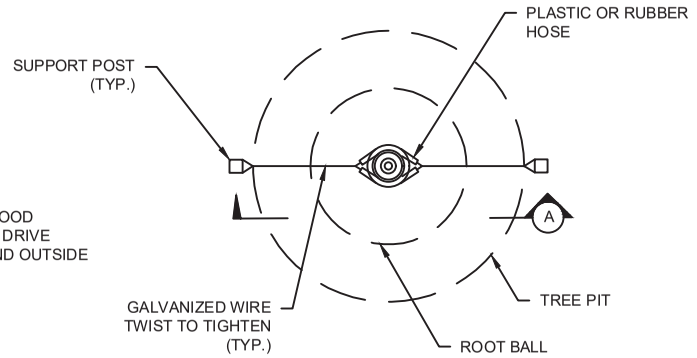

PERMIT PLANS FOR REFERENCE ONLY

NOTES:

1. USE 3 POSTS FOR STAKING EVERGREEN TREES 8' HIGH OR GREATER. USE 2 POSTS FOR STAKING EVERGREEN TREES LESS THAN 8' HIGH.
2. THE PLANTING PIT SIZE SHALL BE TWICE THE DIAMETER OF THE ROOT BALL IN WIDTH AND LESS THAN 2" LESS THAN THE HEIGHT OF THE ROOT BALL.
3. ALL EXTERIOR PACKAGING MATERIAL APPLIED TO THE PLANTS SHALL BE REMOVED AFTER THE PLANT IS LOCATED IN THE PLANTING PIT. CUT AND REMOVE TWINE, BURLAP, OR WIRE BASKETS FROM THE TOP 2/3 OF THE ROOT BALL.
4. USE DOUBLE STRAND NO.10 WIRE FOR EVERGREEN TREES GREATER THAN OR EQUAL TO 8" CALIPER.
5. TREE TRUNK WRAPPING MATERIAL SHALL BE USED AS DIRECTED BY THE ENGINEER.

TREE PLANTING DETAIL
NOT TO SCALE

HRP
MOVE YOUR ENVIRONMENT FORWARD
197 SCOTT SWAMP ROAD
FARMINGTON, CT 06032
(860) 674-9570
HRPASSOCIATES.COM

DETAILS

O'SULLIVAN'S ISLAND FISHING & VIEWING PLATFORM

DERBY, CONNECTICUT

SCALE:	AS NOTED
ISSUE DATE:	12/10/2020
PROJECT NUMBER:	NAU3003.CE
SHEET NO.	**C5.6**

NOTE:
1. VERTICAL AND HORIZONTAL MEMBERS MAXIMUM 8' O.C.
2. ALL COMPONENTS SHALL HAVE BLACK VINYL COATING.

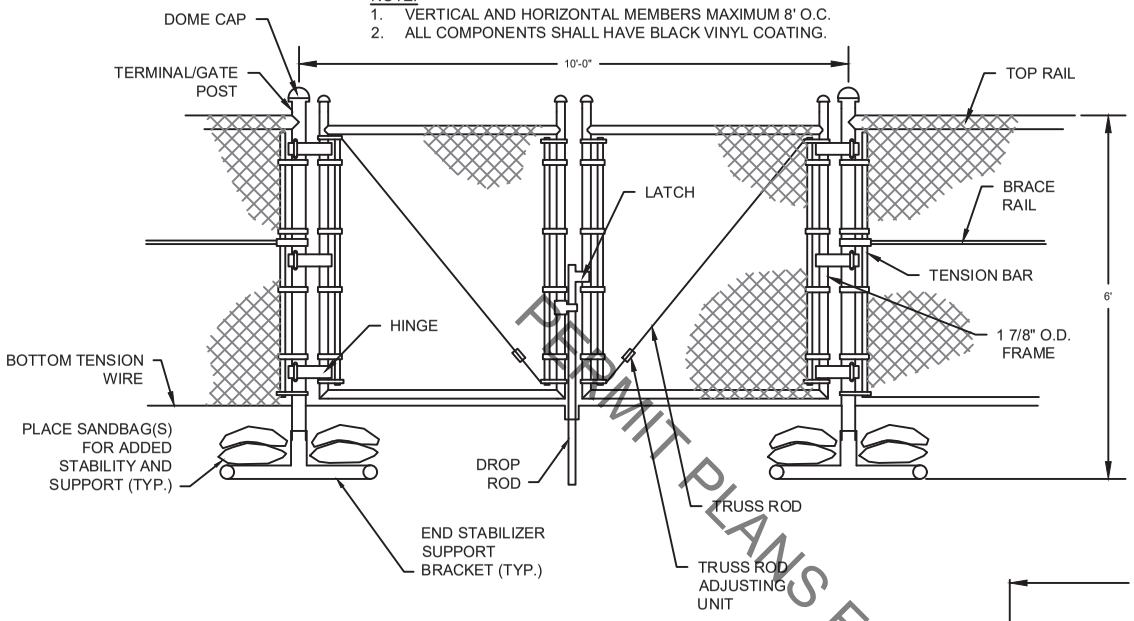

PORTABLE SWING GATE
NOT TO SCALE

PERMIT PLANS FOR REFERENCE ONLY

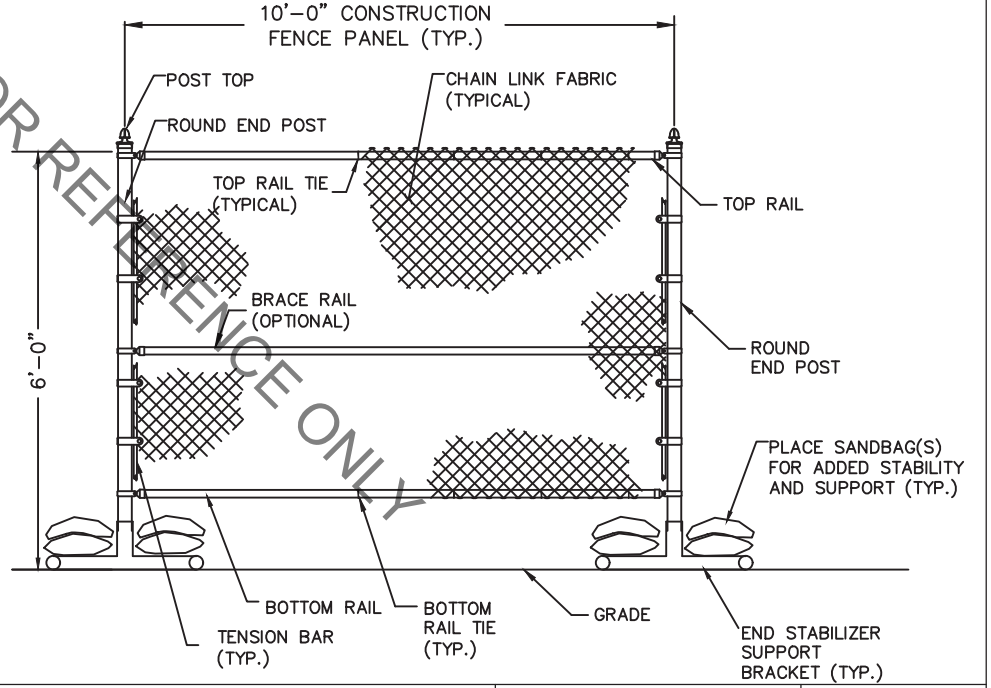

PORTABLE CONSTRUCTION CHAIN LINK FENCE
NOT TO SCALE

HRP
MOVE YOUR ENVIRONMENT FORWARD
197 SCOTT SWAMP ROAD
FARMINGTON, CT 06032
(860) 674-9570
HRPASSOCIATES.COM

DETAILS

O'SULLIVAN'S ISLAND FISHING & VIEWING PLATFORM

DERBY, CONNECTICUT

SCALE:	AS NOTED
ISSUE DATE:	12/10/2020
PROJECT NUMBER:	NAU3003.CE
SHEET NO.	C5.7

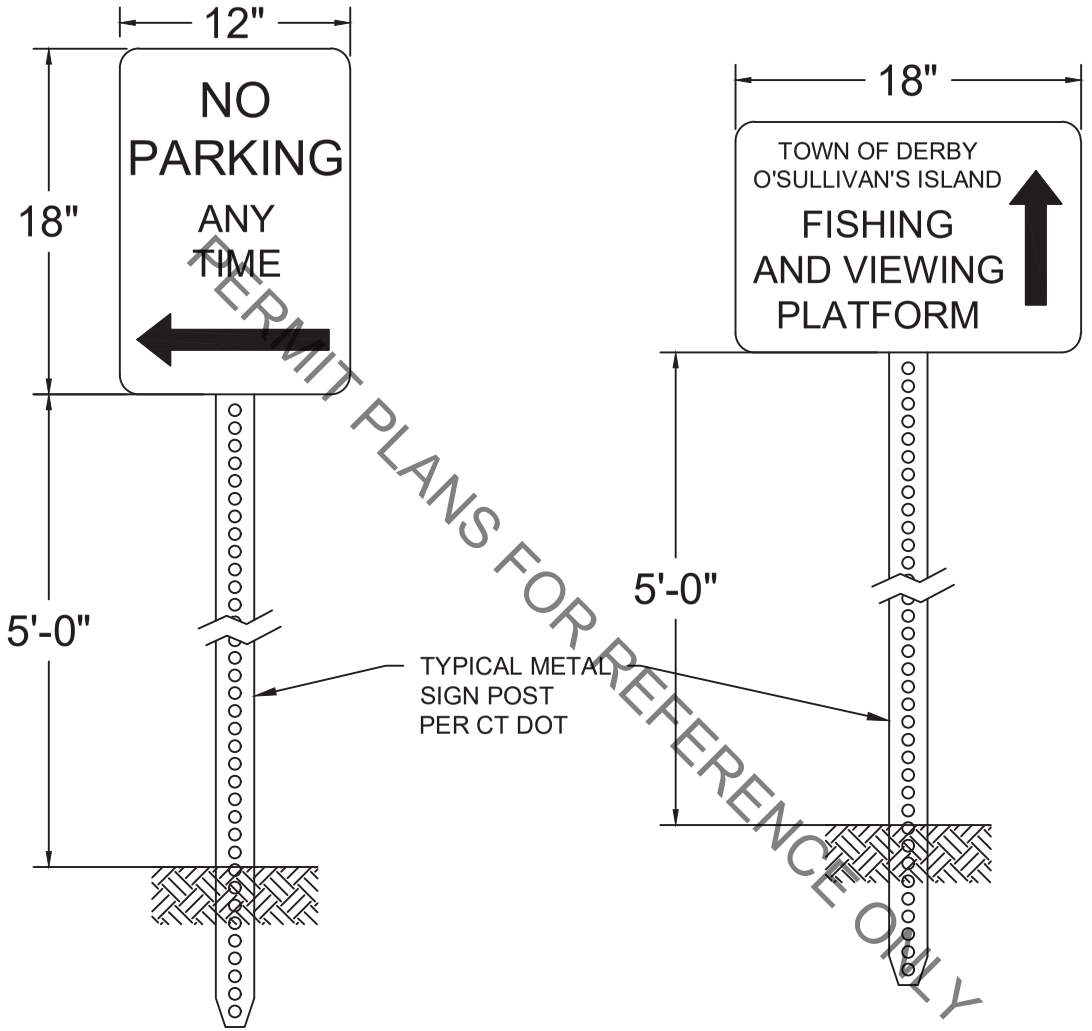

PERMIT PLANS FOR REFERENCE ONLY

MUTCD NO. R7-1 "NO PARKING" SIGN
NOT TO SCALE

PROJECT SIGN
NOT TO SCALE

HRP
MOVE YOUR ENVIRONMENT FORWARD
197 SCOTT SWAMP ROAD
FARMINGTON, CT 06032
(860) 674-9570
HRPASSOCIATES.COM

DETAILS

O'SULLIVAN'S ISLAND FISHING
& VIEWING PLATFORM

DERBY, CONNECTICUT

SCALE:	AS NOTED
ISSUE DATE:	12/10/2020
PROJECT NUMBER:	NAU3003.CE

C5.8
SHEET NO.

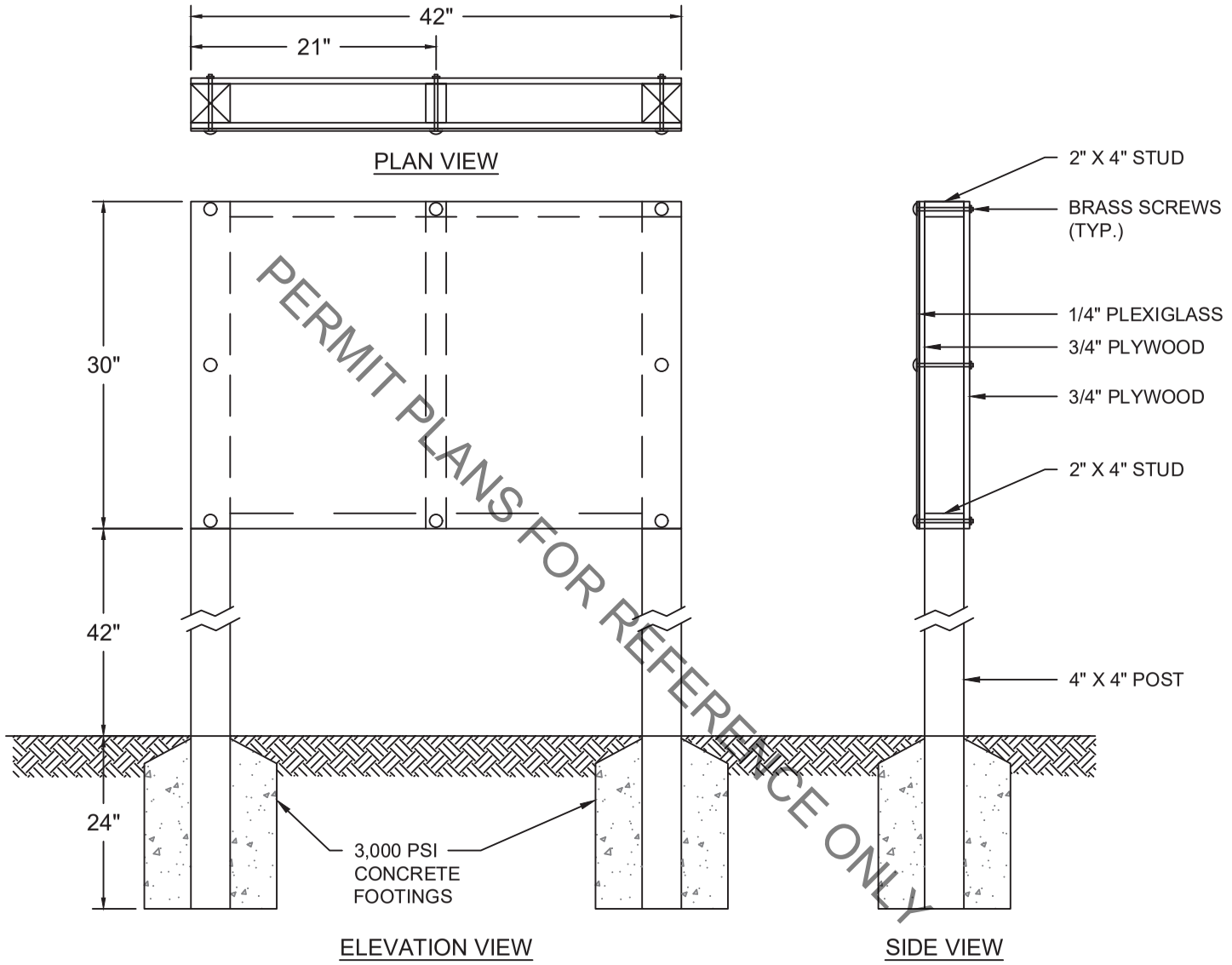

PERMIT PLANS FOR REFERENCE ONLY

SIGN BOARD
NOT TO SCALE

HRP
MOVE YOUR ENVIRONMENT FORWARD
197 SCOTT SWAMP ROAD
FARMINGTON, CT 06032
(860) 674-9570
HRPASSOCIATES.COM

DETAILS

O'SULLIVAN'S ISLAND FISHING
& VIEWING PLATFORM

DERBY, CONNECTICUT

SCALE:	AS NOTED
ISSUE DATE:	05/14/2021
PROJECT NUMBER:	NAU3003.CE

C5.9
SHEET NO.

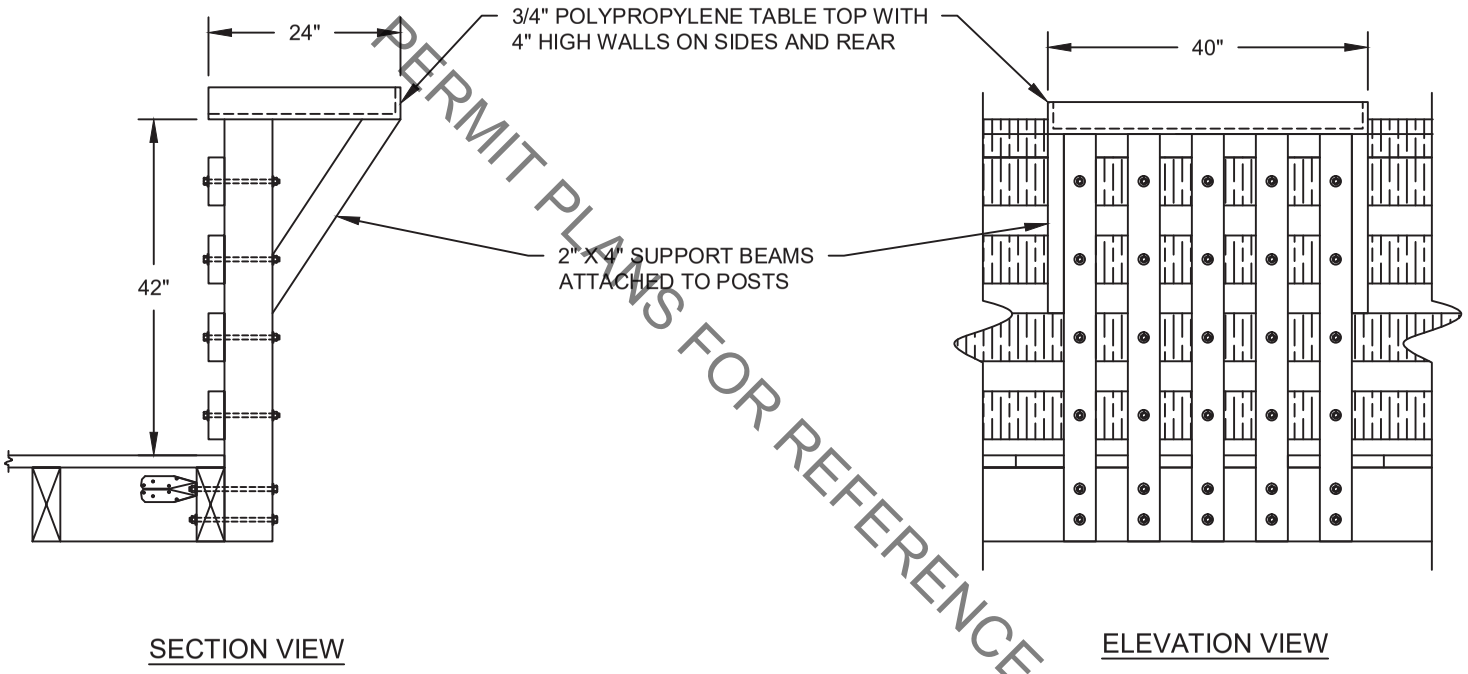

PERMIT PLANS FOR REFERENCE ONLY

FISH CUTTING/BAIT STATION
NOT TO SCALE

HRP
MOVE YOUR ENVIRONMENT FORWARD
197 SCOTT SWAMP ROAD
FARMINGTON, CT 06032
(860) 674-9570
HRPASSOCIATES.COM

DETAILS

O'SULLIVAN'S ISLAND FISHING
& VIEWING PLATFORM

DERBY, CONNECTICUT

SCALE:	AS NOTED
ISSUE DATE:	05/14/2021
PROJECT NUMBER:	NAU3003.CE

C5.10
SHEET NO.

Connecticut Department of
ENERGY &
ENVIRONMENTAL
PROTECTION

Bureau of Water Protection & Land Reuse
Land & Water Resources Division

79 Elm Street • Hartford, CT 06106-5127 portal.ct.gov/DEEP Affirmative Action/Equal Opportunity Employer

Land Record Filing*

To: DO NOT FILE

Signature and

NOTE: Due to the electronic delivery of this license and the legal requirement to have a live signature on this document, the "Land Record Filing" as detailed in General Condition #1 will be sent to the Licensee via U.S. Mail for the Licensee to file with the city/town clerk.

~~**Date:**~~

~~**Subject:**~~ _____
~~License # _____~~

If you have any questions pertaining to this matter, please contact the Land & Water Resources Division at 860-424-3019.

~~Return to:~~

~~Land & Water Resources Division~~
~~State of Connecticut~~
~~Department of Energy & Environmental Protection~~
~~79 Elm Street~~
~~Hartford, CT 06106-5127~~

*The Licensee shall file the Land Record Filing on the land records of the municipality in which the subject property is located not later than thirty (30) days after license issuance pursuant to Connecticut General Statutes (CGS) Section 22a-363g. A copy of the Notice with a stamp or other such proof of filing with the municipality shall be submitted to the Commissioner no later than sixty (60) days after license issuance.

Connecticut Department of
ENERGY &
ENVIRONMENTAL
PROTECTION

Bureau of Water Protection & Land Reuse
Land & Water Resources Division

79 Elm Street • Hartford, CT 06106-5127 portal.ct.gov/DEEP Affirmative Action/Equal Opportunity Employer

LWRD Work Commencement Form

To: Regulatory Section
Department of Energy and Environmental Protection
Land & Water Resources Division
79 Elm Street
Hartford, CT 06106-5127

Licensee Name: City of Derby
Municipality in which the project is occurring: Derby
DEEP License No(s): 202078550-SDF

CONTRACTOR(s):

1 Name: _____
Address: _____
Telephone: _____
E-mail: _____

2 Name: _____
Address: _____
Telephone: _____
E-mail: _____

3 Name: _____
Address: _____
Telephone: _____
E-mail: _____

Date Contractor(s) received a copy
of the license and approved plans: _____

EXPECTED DATE OF COMMENCEMENT OF WORK: _____

EXPECTED DATE OF COMPLETION OF WORK: _____

LICENSEE: _____ _____
(Signature) (Date)

Connecticut Department of
ENERGY &
ENVIRONMENTAL
PROTECTION

79 Elm Street • Hartford, CT 06106-5127 portal.ct.gov/DEEP Affirmative Action/Equal Opportunity Employer

Compliance Certification Form

The following certification must be signed by the licensee working in consultation with a Connecticut-licensed design professional and must be submitted to the address indicated at the end of this form within ninety (90) days of completion of the authorized work.

1. Licensee Name: City of Derby

   DEEP License Number(s): 202078550-SDF

   Municipality in which project is occurring: Derby

2. **Check one:**

   (a) ☐ "I certify that the final site conditions and / or structures are in general conformance with the approved site plans". Identify and describe any deviations and attach to this form.

   (b) ☐ "The final site conditions and / or structures are not in general conformance with the approved site plans. The enclosed "as-built" plans note the modifications".

3. "I understand that any false statement in this certification is punishable as a criminal offence under section 53a-157b of the General Statutes and under any other applicable law."

_____ _____
Signature of Licensee Date

_____
Name of Licensee (print or type)

_____ _____
Signature of CT-Licensed Design Professional Date

_____
Name of CT-Licensed Design Professional (print or type)

_____
Professional License Number (if applicable) Affix Stamp Here

- As-built plans shall include: elevations or tidal datums, as applicable, and structures, including any proposed elevation views and cross sections included in the approved license plans. Such as-built plans shall be the original ones and be signed and sealed by an engineer, surveyor or architect, as applicable, who is licensed in the State of Connecticut.
- The Licensee will be notified by staff of the Land and Water Resources Division (LWRD) if further compliance review is necessary. Lack of response by LWRD staff does not imply compliance.

Submit this completed form to :
Regulatory Section
Department of Energy and Environmental Protection
Land & Water Resources Division
79 Elm Street
Hartford, CT 06106-5127

CITY OF DERBY – INLAND WETLANDS AGENCY
December 9, 2020

(DRAFT) Motion:

That the City of Derby Inland Wetlands Agency (DIWA), having considered the factors pursuant to Section 10 of the Inland Regulations Protecting the Wetlands and Watercourses of the City of Derby (the Regulations) and after review of written and verbal information provided by the applicant, Agency members and City staff, finds the following:

1. On October 23, 2020, the City of Derby (Applicant) submitted application No. 20111101 for activities in and within 50 feet of the wetlands and watercourses and other upland areas adjacent to the wetlands on Assessor's Map 8-3, Lot 5. The activities are associated with the construction of an observation and fishing platform over the Housatonic River and associated walkway located at O'Sullivan's Island Park.

2. An A-2/T-2 Survey is referenced which identified the existing site conditions.

3. The applicant is not proposing stormwater detention with the park being located in the FEMA floodway and 100-yr floodplain. Stormwater detention and delay of the peak flow from the site may more coincide with high water levels in the Housatonic River and is therefore not warranted.

4. There will be direct wetland impacts of 1,600 square feet (0.03 acres) and 700 square feet (0.01 acres) of within the 50' regulated upland review area for the purpose of construction the observation/fishing platform and the walkway, landscaping, etc.

5. That this application is not a "significant activity" in accordance with the definition of "significant activity" as found in the Regulations and will require a Summary Ruling.

6. Best Management practices have been employed in the design of sedimentation and erosion control measures that include sediment filter fence reinforced with hay bales, and a flood contingency plan.

7. Information was provided by the Applicant, City staff, Agency members during the special meetings held on November 11, 2020 and December 9, 2020.

Therefore, the Agency moves to approve Application No. 20111101 with modifications as presented and shown on the following documents submitted in support of the application:

1. City of Derby Inland Wetlands Agency (DIWA) application

2. Notification to City of Shelton

3. General Description of Proposal, prepared by HRP Associates, Inc.

4. Adjacent Property Owners List, provided by HRP Associates, Inc.

5. Connecticut Department of Energy & Environmental Protection Statewide Inland Wetlands & Watercourses Activity Reporting Form

6. Site Drawings, consisting of the following sheets:

    - Overall Site Layout Plan, Sheet No. C1.0, prepared by HRP Associates, Inc., dated September 16, 2020, scale: 1"=40'
    - Title Sheet, prepared by HRP Associates, Inc., dated September 2020
    - Overall Existing Conditions Plan, Sheet No. E1.0, prepared by HRP Associates, Inc., dated September 16, 2020, scale: 1"=40'
    - Existing Conditions Plan, Sheet No. E1.1, prepared by HRP Associates, Inc., dated September 16, 2020, scale: 1"=20'
    - Existing Conditions Plan, Sheet No. E1.2, prepared by HRP Associates, Inc., dated September 16, 2020, scale: 1"=20'
    - Overall Site Layout Plan, Sheet No. C1.0, prepared by HRP Associates, Inc., dated September 16, 2020, scale: 1"=40'
    - Site Layout Plan, Sheet No. C1.1, prepared by HRP Associates, Inc., dated September 16, 2020, scale: 1"=20'
    - Site Layout Plan, Sheet No. C1.2, prepared by HRP Associates, Inc., dated September 16, 2020, scale: 1"=20'
    - Cross Section View, Sheet No. C1.3, prepared by HRP Associates, Inc., dated September 16, 2020, scale: 1"=10'
    - Grading Plan, Sheet No. C2.1, prepared by HRP Associates, Inc., dated September 16, 2020, scale: 1"=40'
    - Soil Erosion and Sediment Control Plan, Sheet No. C3.1, prepared by HRP Associates, Inc., dated September 16, 2020, scale: 1"=40'
    - Soil Erosion and Sediment Control Notes & Details, Sheet No. C3.2, prepared by HRP Associates, Inc., dated September 16, 2020
    - Site Access Plan, Sheet No. C4.1, prepared by HRP Associates, Inc., dated September 16, 2020, scale: 1"=500'
    - Details, Sheet No. C5.1, prepared by HRP Associates, Inc., dated September 16, 2020
    - Details, Sheet No. C5.2, prepared by HRP Associates, Inc., dated September 16, 2020
    - Details, Sheet No. C5.3, prepared by HRP Associates, Inc., dated September 16, 2020
    - Details, Sheet No. C5.4, prepared by HRP Associates, Inc., dated September 16, 2020
    - Details, Sheet No. C5.5, prepared by HRP Associates, Inc., dated September 16, 2020

7. Letter from Milone and MacBroom, Inc., dated November 30, 2020

8. Letter from HRP Associates, Inc., dated December 8, 2020

In addition to the requirements listed in Sections 11.9, 11.12 and 11.13 of the Regulations Protecting the Wetlands and Watercourses of the City of Derby, the following stipulations also apply:

1. As the project site is subject to flooding, the contractor shall monitor weather forecasts and stabilize the construction site and remove equipment from flood prone areas in the event of flood warnings. All work is to be performed in conformance the referenced documents.

2. In accordance with Section 17.1 of the Regulations, the applicant shall obtain all required approvals from the Connecticut Department of Energy and Environmental Protection and the US Army Corps of Engineers as required.

3. All maintenance and refueling of equipment and vehicles shall be performed at least 50 feet or as far as practical from all wetlands and watercourses.

4. All disturbed areas on the site not directly required for construction activities shall be temporarily hayed and seeded until permanent vegetation is established.

5. After commencement of construction, an inspection of the condition, integrity, and adequacy of the sedimentation and erosion controls shall be made by a qualified party on a regular basis, at least once every seven calendar days and within 24 hours of the end of a storm event that is 1.0 inches or greater and until the City of Derby determines that inspections are no longer required.

6. The WEO, City Engineer or any other duly authorized representative of the City of Derby shall have the authority to direct the applicant, developer and or contractor to install additional sediment and erosion control measures as conditions may warrant.

7. A contact individual together with a 24-hour phone number shall be designated with responsibility and authority to receive notices of any breaches or deficiencies of sedimentation and erosion controls on-site, and to coordinate repair on any such breach or deficiencies with 8 hours of the notice from the sediment and erosion control inspector, WEO, City Engineer or any other duly authorized representative of the City of Derby.

8. Any further changes or modifications to the application presented shall be submitted to the DIWA to determine if additional review and approval is necessary.

9. Lack of compliance with any stipulation of this permit approval shall constitute a violation of the Regulations, and a cease and desist order shall be issued by the WEO.

10. The Agency's decision to grant this approval makes no warranties or representations, either express or implied, that future regulated activities will be permitted on this site.

CITY OF DERBY – PLANNING & ZONING COMMISSION
December 15, 2020

Application: City of Derby –O'Sullivan's Island Fishing and Viewing Platform
Application for Site Plan Approval

Pursuant to Article XV of the Derby Zoning Regulations, and Chapter 92, Flood Prevention Ordinance of the City of Derby, the Derby Planning & Zoning Commission finds the following:

1. The application and supporting documentation as presented is in accordance with Sections 195-30 through 195-33.
2. The plans as proposed will result in improvements within the Floodplain and Floodway Boundaries as depicted on Flood Insurance Rate Map 09009C0403H, dated 12/17/2010.
3. The applicant has demonstrated that there will be no changes to the flood plain elevation based on the proposed improvements.
4. The area of the application is located adjacent to a portion of the Housatonic River that is tidally influenced.

Therefore, following review of the plans and supporting documentation submitted in support of this application, the Derby Planning & Zoning Commission hereby approves the Application for Site Plan Approval for the City of Derby on property shown on Derby Assessors Map 8-5, Lot 3, with the following stipulated conditions:

1. Compliance with the conditions of approval from the Derby Inland Wetlands Agency dated December 8, 2020
2. The Zoning Enforcement Officer, City Engineer or any other duly authorized representative of the City of Derby shall have the authority to direct the applicant, developer and or contractor to install additional sediment and erosion control measures as conditions may warrant, including temporary erosion control blankets on exposed steep slopes.
3. Any modifications to the above referenced drawings shall be submitted to the Planning & Zoning Commission for review and action if necessary.
4. The applicant shall furnish the City with an Improvement Location Survey of the property depicting the completed site including all site features along with the proposed changes. In addition to the Improvement Location Survey the applicant shall submit an elevation certificate confirming the elevations associated with the new construction. The elevation certificate shall match the vertical datum of the current FEMA flood mapping when construction is completed.

The approval shall be based upon the following documents submitted in support of this application:

1. "Application for Special Exception Use & Site Plan Approval"
2. Notification to City of Shelton
3. Statement of Use, dated 11/2/2020
4. Letter from Milone and MacBroom, Inc. dated 11/30/2020
5. Letter from HRP Associates, dated 12/11/2020

6. Testimony by the applicant, City Staff, and the Commission at the regularly scheduled meeting on December 15, 2020.
7. Site Drawings, all prepared by HRP Associated, Inc., consisting of the following sheets:
    - Title Sheet, revised to December 10, 2020
    - Overall Existing Conditions Plan, Sheet No. E1.0, dated September 16, 2020, scale: 1”=40’
    - Existing Conditions Plan, Sheet No. E1.1, dated September 16, 2020, scale: 1”=20’
    - Existing Conditions Plan, Sheet No. E1.2, dated September 16, 2020, scale: 1”=20’
    - Overall Site Layout Plan, Sheet No. C1.0, revised to December 10, 2020, scale: 1”=40’
    - Site Layout Plan, Sheet No. C1.1, revised to December 10, 2020scale: 1”=20’
    - Site Layout Plan, Sheet No. C1.2, revised to December 10, 2020, scale: 1”=20’
    - Cross Section View, Sheet No. C1.3, dated September 16, 2020, scale: 1”=10’
    - Grading Plan, Sheet No. C2.1, dated September 16, 2020, scale: 1”=40’
    - Soil Erosion and Sediment Control Plan, Sheet No. C3.1, revised to December 4, 2020, scale: 1”=40’
    - Soil Erosion and Sediment Control Notes & Details, Sheet No. C3.2, revised to December 4, 2020.
    - Site Access Plan, Sheet No. C4.1, dated September 16, 2020, scale: 1”=500’
    - Details, Sheet No. C5.1, dated September 16, 2020
    - Details, Sheet No. C5.2, dated September 16, 2020
    - Details, Sheet No. C5.3, dated September 16, 2020
    - Details, Sheet No. C5.4, dated September 16, 2020
    - Details, Sheet No. C5.5, dated September 16, 2020

FEDERAL WAGE RATES

"General Decision Number: CT20220016 07/08/2022

Superseded General Decision Number: CT20210016

State: Connecticut

Construction Type: Heavy

County: New Haven County in Connecticut.

HEAVY CONSTRUCTION PROJECTS

Note: Contracts subject to the Davis-Bacon Act are generally required to pay at least the applicable minimum wage rate required under Executive Order 14026 or Executive Order 13658. Please note that these Executive Orders apply to covered contracts entered into by the federal government that are subject to the Davis-Bacon Act itself, but do not apply to contracts subject only to the Davis-Bacon Related Acts, including those set forth at 29 CFR 5.1(a)(2)-(60).

If the contract is entered into on or after January 30, 2022, or the contract is renewed or extended (e.g., an option is exercised) on or after January 30, 2022:	. Executive Order 14026 generally applies to the contract. . The contractor must pay all covered workers at least $15.00 per hour (or the applicable wage rate listed on this wage determination, if it is higher) for all hours spent performing on the contract in 2022.
If the contract was awarded on or between January 1, 2015 and January 29, 2022, and the contract is not renewed or extended on or after January 30, 2022:	. Executive Order 13658 generally applies to the contract. . The contractor must pay all covered workers at least $11.25 per hour (or the applicable wage rate listed on this wage determination, if it is higher) for all hours spent performing on that contract in 2022.

|_____|_____|

The applicable Executive Order minimum wage rate will be adjusted annually. If this contract is covered by one of the Executive Orders and a classification considered necessary for performance of work on the contract does not appear on this wage determination, the contractor must still submit a conformance request.

Additional information on contractor requirements and worker protections under the Executive Orders is available at https://www.dol.gov/agencies/whd/government-contracts.

Modification Number	Publication Date
0	01/07/2022
1	02/04/2022
2	02/25/2022
3	04/29/2022
4	05/13/2022
5	05/20/2022
6	05/27/2022
7	06/03/2022
8	06/17/2022
9	07/08/2022

BRCT0001-011 01/03/2022

	Rates	Fringes
BRICKLAYER	$ 38.27	34.47

BRCT0001-012 01/03/2022

	Rates	Fringes
CEMENT MASON/CONCRETE FINISHER	$ 38.27	34.47

---

* CARP0326-011 05/03/2022

Beacon Falls, Bethany, Branford, Cheshire, East Haven, Guilford, Hamden, Madison, Meriden, Middlebury, Naugatuck, New Haven, North Branford, North Haven, Orange (east of Orange Center Road and north of Route 1, and north of Route 1 and east of the Oyster River), Prospect, Southbury, Wallingford, Waterbury, West Haven, Wolcott, Woodbridge

	Rates	Fringes
CARPENTER		
CARPENTERS, PILEDRIVERS	$ 36.07	26.15
DIVER TENDER	$ 36.07	26.15
DIVER	$ 44.53	26.15

CARP0326-020 05/02/2022

Ansonia, Derby, Milford, Orange (West of Orange Center Road and South of Route 1 and West of the Oyster River), Oxford, Seymour

	Rates	Fringes
CARPENTER		
CARPENTER, PILEDRIVER	$ 36.07	26.15
DIVER TENDER	$ 36.07	26.15
DIVER	$ 44.53	26.15

CARP1121-006 01/03/2022

	Rates	Fringes
MILLWRIGHT	$ 36.32	26.81

ELEC0090-004 06/01/2022

Entire County excluding Beacon Falls, Middlebury, Milford, Naugatuck, Oxford, Prospect, Seymour, Southbury, Waterbury and Wolcott Townships

	Rates	Fringes
ELECTRICIAN	$ 40.60	3%+32.21

ELEC0488-007 06/01/2022

Beacon Falls, Middlebury, Milford, Naugatuck, Oxford, Prospect, Seymour, Southbury, Waterbury and Wolcott Townships

	Rates	Fringes

ELECTRICIAN.....$ 41.40 3%+31.07

ENGI0478-001 04/03/2022

	Rates	Fringes
Power equipment operators:		
GROUP 1	$ 50.27	26.80
GROUP 2	$ 49.91	26.80
GROUP 3	$ 49.06	26.80
GROUP 4	$ 44.42	26.80
GROUP 5	$ 43.73	26.80
GROUP 6	$ 43.38	26.80
GROUP 7	$ 42.99	26.80
GROUP 8	$ 44.86	26.80
GROUP 9	$ 42.04	26.80
GROUP 10	$ 39.70	26.80
GROUP 11	$ 39.70	26.80
GROUP 12	$ 39.63	26.80
GROUP 13	$ 41.39	26.80
GROUP 14	$ 38.97	26.80
GROUP 15	$ 38.61	26.80
GROUP 16	$ 37.66	26.80
GROUP 17	$ 37.20	26.80
GROUP 18	$ 36.46	26.80
GROUP 19	$ 46.07	26.80
GROUP 20	$ 45.71	26.80
GROUP 21	$ 44.86	26.80

Hazardous waste premium $3.00 per hour over classified rate.

Crane with boom, including jib, 150 feet - $1.50 extra.
Crane with boom, including jib, 200 feet - $2.50 extra.
Crane with boom, including jib, 250 feet - $5.00 extra.
Crane with boom, including jib, 300 feet - $7.00 extra.
Crane with boom, including jib, 400 feet - $10.00 extra

1) Crane handling or erecting structural steel or stone, hoisting engineer(2 drums or over)
2) Cranes(100 ton rated capacity and over) Bauer Drill/Caisson
3) Cranes(under 100 ton rated capacity)

a. PAID HOLIDAYS: New Year's Day, Good Friday, Memorial Day, Independence Day, Labor Day, Thanksgiving Day and Christmas Day, provided the employee works 3 days during the week in

which the holiday falls, if scheduled, and if scheduled, the working day before and the working day after the holiday.

POWER EQUIPMENT OPERATORS CLASSIFICATIONS

GROUP 1: Crane handling or erecting structural steel or stone, hoisting engineer (2 drums or over)

GROUP 2: Cranes (100 ton capacity & over) Bauer Drill/Caisson

GROUP 3: Cranes (under 100 ton rated capacity)

GROUP 4: Trenching machines, lighter derrick, concrete finishing machine, CMI machine or similar, Koehring Loader (skooper).

GROUP 5: Specialty railroad equipment, asphalt spreader, asphalt reclaiming machine, line grider, concrete pumps, drills with self contained power units, boring machine, post hole digger, auger, pounder, well digger, milling machine (over 24' mandrel), side boom, combination hoe and loader, directional driller

GROUP 6: Front end loader (3 cu. yds. up to 7 cu. yards), bulldozer (Rough grade dozer) .

GROUP 7: Asphalt roller, concrete saws and cutters (ride on types), Vermeer concrete cutter, stump grinder, scraper, snooper, skidder, milling machine (24"" and under Mandrel).

GROUP 8: Mechanic, grease truck operator, hydoblaster, barrier mover, power stone spreader, welder, work boat under 26 ft. transfer machine.

GROUP 9: Front end loader (under 3 cubic yards), skid steer loader (regardless of attachments), bobcat or similar, forklift, power chipper, landscape equipment (including hydroseeder), Vacuum Exacavation Truck and Hydrovac Excavation Truck (27 HG pressure or greater).

GROUP 10: Vibratory hammer,ice machine, diesel & air, hammer, etc.

GROUP 11: Conveyor, earth roller, power pavement breaker (whiphammer), robot demolition equipment.

GROUP 12: Wellpoint operator.

GROUP 13: Portable asphalt plant operator, portable concrete plant operator, portable crusher plant operator, portable grout plant operator, portable water filtration plant operator.

GROUP 14: Compressor battery operator.

GROUP 15: Power Safety boat, Vacuum truck, Zim mixer, Sweeper; (Minimum for any job requiring a CDL license) .

GROUP 16: Elevator operator, tow motor operator (solid tire no rough terrain).

GROUP 17: Generator operator, compressor operator, pump operator,welding machine operator; Heater operator.

GROUP 18: Maintenance engineer.

GROUP 19: Front end loader(7 cubic yards or over); work boat 26 ft. and over.

GROUP 20: Excavator over 2 cubic yards; pile driver($3.00 premium when operator
controls hammer).

GROUP 21: Excavator, gradall, master mechanic, hoisting engineer (all types of equipment where a drum and cable are used to hoist or drag material regardless of motive power or operaing), rubber tire excavator (drott 1085
similar), grader operator, bulldozer finegrade (slopes shaping, laser or GPS, ect.)

ENGI0478-011 04/03/2022

	Rates	Fringes
POWER EQUIPMENT OPERATOR:		
Asphalt Paver	$ 43.73	26.80
Asphalt Roller	$ 42.99	26.80
Asphalt Spreader	$ 43.73	26.80
Backhoe/Excavator 2 cubic		

yards and over	$ 45.71	26.80
Backhoe/Excavator under 2 cubic yards	$ 44.86	26.80
Crane handling or erecting structural steel or stone	$ 50.27	26.80
Cranes (100 ton capacity & over)	$ 49.91	26.80
Cranes (under 100 ton rated capacity)	$ 49.06	26.80
Drills with self contained power units; Directional driller	$ 43.73	26.80
Earth Roller	$ 39.70	26.80
Forklift	$ 42.04	26.80
Front End Loader (3 cubic yards up to 7 cubic yards)	$ 43.38	26.80
Front End Loader (7 cubic yards or over)	$ 46.07	26.80
Front End Loader (under 3 cubic yards)	$ 42.04	26.80
Grader/Blade	$ 44.86	26.80
Maintenance Engineer/Oiler	$ 36.46	26.80
Mechanic	$ 44.86	26.80
Rubber Tire Backhoe/Excavator	$ 44.86	26.80

a. PAID HOLIDAYS: New Year's Day, Good Friday, Memorial Day, Independence Day, Labor Day, Thanksgiving Day and Christmas Day, provided the employee works 3 days during the week in which the holiday falls, if scheduled, and if scheduled, the working day before and the working day after the holiday.

b. Crane with boom, including jib, 150 feet - $1.50 extra .
Crane with boom, including jib, 200 feet- $2.50 extra.
Crane with boom, including jib, 250 feet - $5.00 extra.
Crane with boom, including jib, 300 feet - $7.00 extra.
Crane with boom, including jib, 400 feet - $10.00 extra.

1) Crane handling or erecting structural steel or stone, hoisting engineer(2 drums or over)
2) Cranes(100 ton rated capacity and over) Bauer Drill/Caisson
3) Cranes(under 100 ton rated capacity)

IRON0015-005 06/06/2022

	Rates	Fringes
IRONWORKER, REINFORCING	$ 39.70	38.77

a. PAID HOLIDAY: Labor Day provided employee has been on the payroll for the 5 consecutive work days prior to Labor Day.

LABO0146-002 04/03/2022

	Rates	Fringes
Laborers: (TUNNEL CONSTRUCTION)		
CLEANING, CONCRETE AND CAULKING TUNNEL:		
Concrete Workers, Form Movers and Strippers	$ 33.26	24.40
Form Erectors	$ 33.59	24.40
ROCK SHAFT, CONCRETE, LINING OF SAME AND TUNNEL IN FREE AIR:		
Brakemen, Trackmen, Tunnel Laborers, Shaft Laborers	$ 33.26	24.40
Laborers Topside, Cage Tenders, Bellman	$ 33.15	24.40
Miners	$ 34.23	24.40
SHIELD DRIVE AND LINER PLATE TUNNELS IN FREE AIR:		
Brakemen and Trackmen	$ 33.26	24.40
Miners, Motormen, Mucking Machine Operators, Nozzlemen, Grout Men, Shaft and Tunnel, Steel and Rodmen, Shield and Erector, Arm Operator, Cable Tenders	$ 34.23	24.40
TUNNELS, CAISSON AND CYLINDER WORK IN COMPRESSED AIR:		
Blaster	$ 40.72	24.40
Brakemen, Trackmen, Groutman, Laborers, Outside Lock Tender,		

Gauge Tenders.....$ 40.52 24.40
Change House Attendants,
Powder Watchmen, Top on
Iron Bolt.....$ 38.54 24.40
Mucking Machine Operator...$ 41.31 24.40

a. PAID HOLIDAYS: On tunnel work only: New Year's Day, Memorial Day, Independence Day, Labor Day, Thanksgiving Day and Christmas Day.

No employee shall be eligible for holiday pay when he fails, without cause, to work the regular work day preceding the holiday or the regular work day following the holiday.

LABO0146-003 04/03/2022

	Rates	Fringes
LABORERS		
GROUP 1	$ 32.00	24.40
GROUP 2	$ 32.25	24.40
GROUP 3	$ 32.50	24.40
GROUP 4	$ 33.00	24.40
GROUP 5	$ 33.75	24.40
GROUP 6	$ 34.00	24.40
GROUP 7	$ 18.00	24.40

LABORERS CLASSIFICATIONS

GROUP 1: Laborers (Unskilled), acetylene burner, concrete specialist

GROUP 2: Chain saw operators, fence and guard rail erectors, pneumatic tool operators and powdermen.

GROUP 3: Pipelayers, Jackhammer/Pavement breaker (handheld), mason tenders/catch basin builders, asphalt rakers, air track operators, block paver and curb setter

GROUP 4: Asbestos/lead removal

GROUP 5: Blasters

GROUP 6: Toxic waste remover

GROUP 7: Traffic control signalman

PAIN0011-013 06/01/2021

	Rates	Fringes
PAINTER		
Brush and Roller	$ 36.42	22.90
Spray Only	$ 39.42	22.90
Steel Only	$ 38.42	22.90

TEAM0064-001 04/03/2022

	Rates	Fringes
Truck drivers:		
2 Axle Ready Mix	$ 31.27	28.78
2 Axle	$ 31.16	28.78
3 Axle Ready Mix	$ 31.33	28.78
3 Axle	$ 31.27	28.78
4 Axle Ready Mix	$ 31.44	28.78
4 Axle	$ 31.39	28.78
Heavy Duty Trailer 40 tons and over	$ 33.66	28.78
Heavy Duty Trailer up to 40 tons	$ 32.39	28.78
Specialized (Earth moving equipment other than conventional type on-the-road trucks and semi-trailers, including Euclids)	$ 31.44	28.78
Snorle Truck	$ 31.54	28.78

Hazardous waste removal work receives additional $1.25 per hour.

a. PAID HOLIDAYS: New Year's Day, Memorial Day, Independence Day, Labor Day, Thanksgiving Day, Christmas Day and Good Friday, provided the employee has at least 31 calendar days of service and works the last scheduled day before and the first scheduled day after the holiday, unless excused.

TEAM0064-006 04/03/2022

	Rates	Fringes
TRUCK DRIVER: 4 Axle Truck	$ 31.39	28.78

Hazardous waste removal work receives additional $1.25 per hour.

a. PAID HOLIDAYS: New Year's Day, Memorial Day, Independence Day, Labor Day, Thanksgiving Day, Christmas Day and Good Friday, provided the employee has at least 31 calendar days of service and works the last scheduled day before and the first scheduled day after the holiday, unless excused.

SUCT2002-011 12/16/2008

	Rates	Fringes
IRONWORKER, STRUCTURAL	$ 24.85	13.83
OPERATOR: Bulldozer	$ 25.33	9.64

WELDERS - Receive rate prescribed for craft performing operation to which welding is incidental.

==========

Note: Executive Order (EO) 13706, Establishing Paid Sick Leave for Federal Contractors applies to all contracts subject to the Davis-Bacon Act for which the contract is awarded (and any solicitation was issued) on or after January 1, 2017. If this contract is covered by the EO, the contractor must provide employees with 1 hour of paid sick leave for every 30 hours they work, up to 56 hours of paid sick leave each year. Employees must be permitted to use paid sick leave for their own illness, injury or other health-related needs, including preventive care; to assist a family member (or person who is like family to the employee) who is ill, injured, or has other health-related needs, including preventive care; or for reasons resulting from, or to assist a family member (or person who is like family to the employee) who is a victim of, domestic

violence, sexual assault, or stalking. Additional information on contractor requirements and worker protections under the EO is available at https://www.dol.gov/agencies/whd/government-contracts.

Unlisted classifications needed for work not included within the scope of the classifications listed may be added after award only as provided in the labor standards contract clauses (29CFR 5.5 (a) (1) (ii)).

The body of each wage determination lists the classification and wage rates that have been found to be prevailing for the cited type(s) of construction in the area covered by the wage determination. The classifications are listed in alphabetical order of ""identifiers"" that indicate whether the particular rate is a union rate (current union negotiated rate for local), a survey rate (weighted average rate) or a union average rate (weighted union average rate).

Union Rate Identifiers

A four letter classification abbreviation identifier enclosed in dotted lines beginning with characters other than ""SU"" or ""UAVG"" denotes that the union classification and rate were prevailing for that classification in the survey. Example: PLUM0198-005 07/01/2014. PLUM is an abbreviation identifier of the union which prevailed in the survey for this classification, which in this example would be Plumbers. 0198 indicates the local union number or district council number where applicable, i.e., Plumbers Local 0198. The next number, 005 in the example, is an internal number used in processing the wage determination. 07/01/2014 is the effective date of the most current negotiated rate, which in this example is July 1, 2014.

Union prevailing wage rates are updated to reflect all rate changes in the collective bargaining agreement (CBA) governing this classification and rate.

Survey Rate Identifiers

Classifications listed under the ""SU"" identifier indicate that

no one rate prevailed for this classification in the survey and the published rate is derived by computing a weighted average rate based on all the rates reported in the survey for that classification. As this weighted average rate includes all rates reported in the survey, it may include both union and non-union rates. Example: SULA2012-007 5/13/2014. SU indicates the rates are survey rates based on a weighted average calculation of rates and are not majority rates. LA indicates the State of Louisiana. 2012 is the year of survey on which these classifications and rates are based. The next number, 007 in the example, is an internal number used in producing the wage determination. 5/13/2014 indicates the survey completion date for the classifications and rates under that identifier.

Survey wage rates are not updated and remain in effect until a new survey is conducted.

Union Average Rate Identifiers

Classification(s) listed under the UAVG identifier indicate that no single majority rate prevailed for those classifications; however, 100% of the data reported for the classifications was union data. EXAMPLE: UAVG-OH-0010 08/29/2014. UAVG indicates that the rate is a weighted union average rate. OH indicates the state. The next number, 0010 in the example, is an internal number used in producing the wage determination. 08/29/2014 indicates the survey completion date for the classifications and rates under that identifier.

A UAVG rate will be updated once a year, usually in January of each year, to reflect a weighted average of the current negotiated/CBA rate of the union locals from which the rate is based.

WAGE DETERMINATION APPEALS PROCESS

1.) Has there been an initial decision in the matter? This can be:

* an existing published wage determination
* a survey underlying a wage determination
* a Wage and Hour Division letter setting forth a position on

a wage determination matter
* a conformance (additional classification and rate) ruling

On survey related matters, initial contact, including requests for summaries of surveys, should be with the Wage and Hour National Office because National Office has responsibility for the Davis-Bacon survey program. If the response from this initial contact is not satisfactory, then the process described in 2.) and 3.) should be followed.

With regard to any other matter not yet ripe for the formal process described here, initial contact should be with the Branch of Construction Wage Determinations. Write to:

Branch of Construction Wage Determinations
Wage and Hour Division
U.S. Department of Labor
200 Constitution Avenue, N.W.
Washington, DC 20210

2.) If the answer to the question in 1.) is yes, then an interested party (those affected by the action) can request review and reconsideration from the Wage and Hour Administrator (See 29 CFR Part 1.8 and 29 CFR Part 7). Write to:

Wage and Hour Administrator
U.S. Department of Labor
200 Constitution Avenue, N.W.
Washington, DC 20210

The request should be accompanied by a full statement of the interested party's position and by any information (wage payment data, project description, area practice material, etc.) that the requestor considers relevant to the issue.

3.) If the decision of the Administrator is not favorable, an interested party may appeal directly to the Administrative Review Board (formerly the Wage Appeals Board). Write to:

Administrative Review Board
U.S. Department of Labor
200 Constitution Avenue, N.W.
Washington, DC 20210

4.) All decisions by the Administrative Review Board are final.

```
================================================================

          END OF GENERAL DECISIO"
```