Appendix G: Trail Design Typical Sections

BSC Group engineers developed cross section drawings to illustrate what typical trail sections would look like in various settings throughout the corridor. These drawings were included in context within the Route Discussion Chapter in the report. All of the route section drawings are included herein.

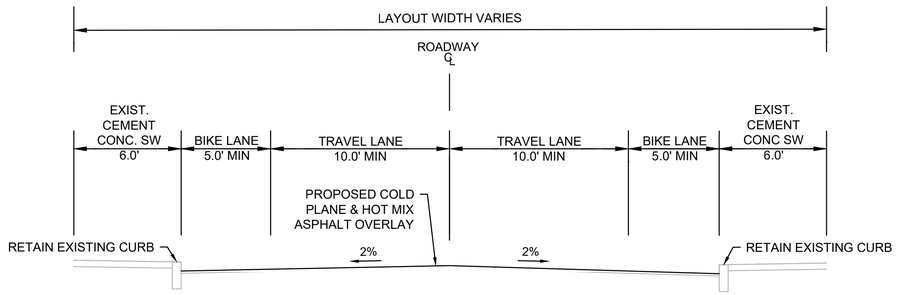

ON-ROAD TRAIL

SCALE: 1" = 4'

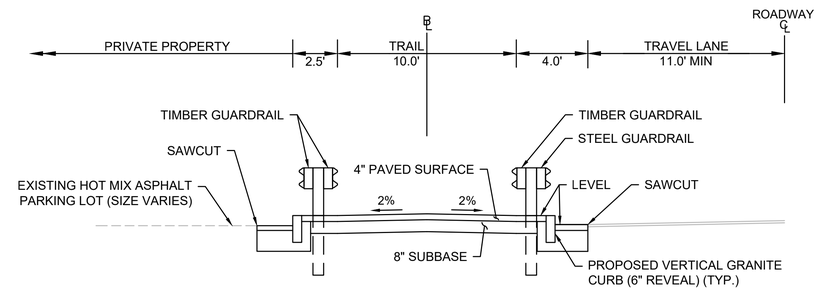

OFF-ROAD TRAIL

BETWEEN ROADWAY AND PRIVATE PARKING LOT
SCALE: 1" = 4'

NOTE:
* LOCATION OF TIMBER RAIL FENCE AS REQUIRED BY ENGINEER.

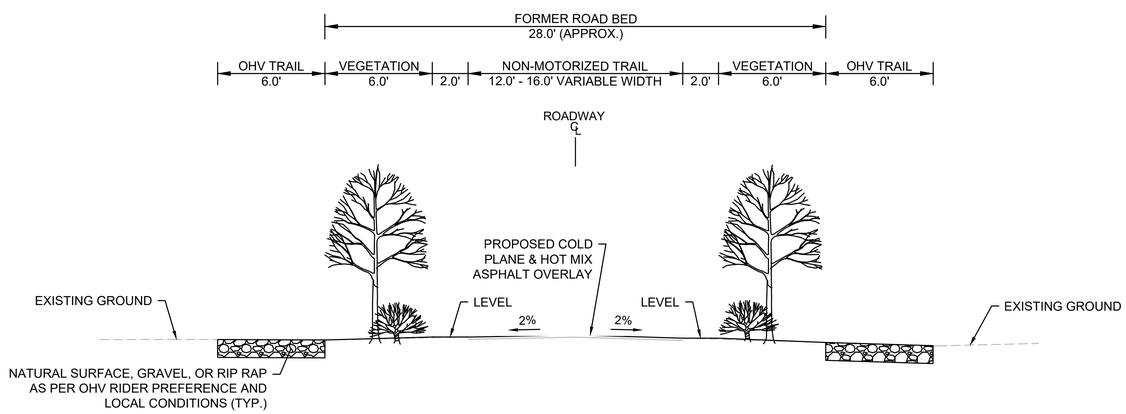

BICYCLE & OHV BIKE TRAILS

SEPARATED MOTORIZED AND
NON-MOTORIZED USES
SCALE: 1" = 4'

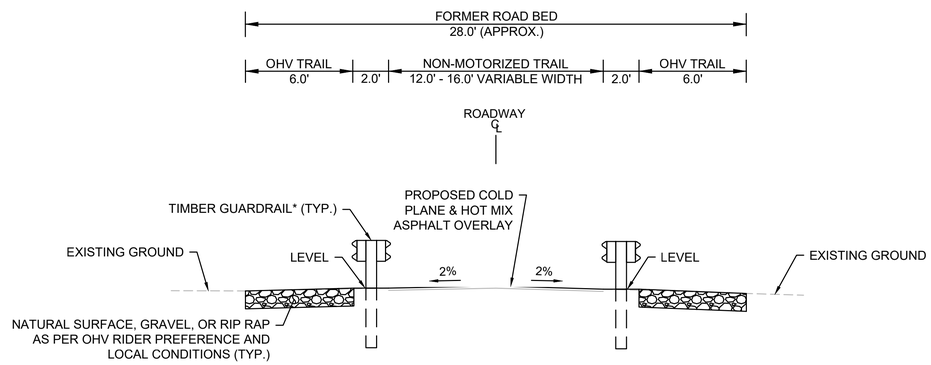

BICYCLE & OHV BIKE TRAILS

SEPARATED MOTORIZED AND
NON-MOTORIZED USES
CONSTRAINED ROW
SCALE: 1" = 4'

NOTE:
* LOCATION OF TIMBER GUARDRAIL AS REQUIRED BY ENGINEER.

WILLIAM PAILLE DATE
PROFESSIONAL ENGINEER

NAUGATUCK RIVER GREENWAY

ROUTING STUDY

IN

HARWINTON / LITCHFIELD
THOMASTON/TORRINGTON

CONNECTICUT

SEPTEMBER 2019

REVISIONS:

NO.	DATE	DESC.

PREPARED FOR:

NAUGATUCK VALLEY COG
49 LEAVENWORTH STREET
WATERBURY, CT 06702

BSC GROUP
300 Winding Brook Drive
Glastonbury, Connecticut
06033
860 652 8227

© 2017 BSC Group, Inc.

SCALE: SEE PLAN

FILE: \PROJ\8366102\TRANS_DWG
DWG.:
JOB. NO: 83661.02
SHEET 1 OF 3

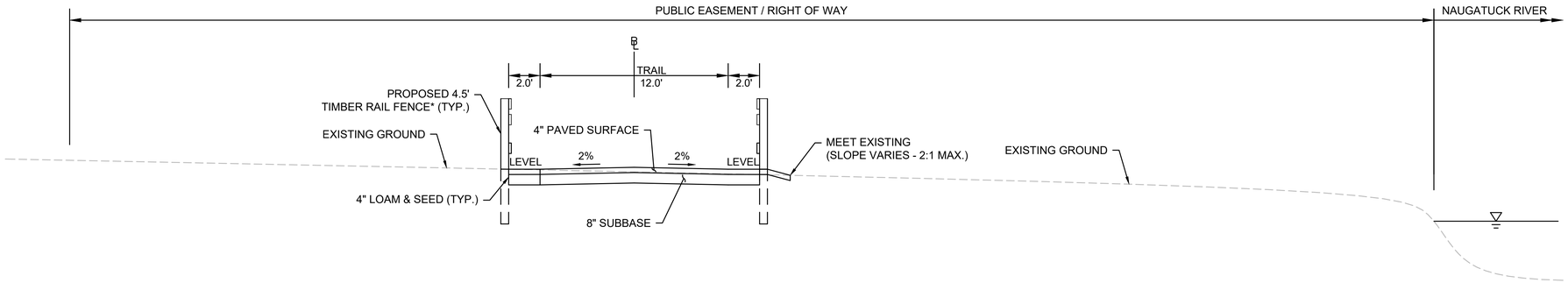

OFF-ROAD TRAIL

GRADUAL CROSS SLOPE
SCALE: 1" = 4'

NOTE:
* LOCATION OF TIMBER RAIL FENCE AS REQUIRED BY ENGINEER.

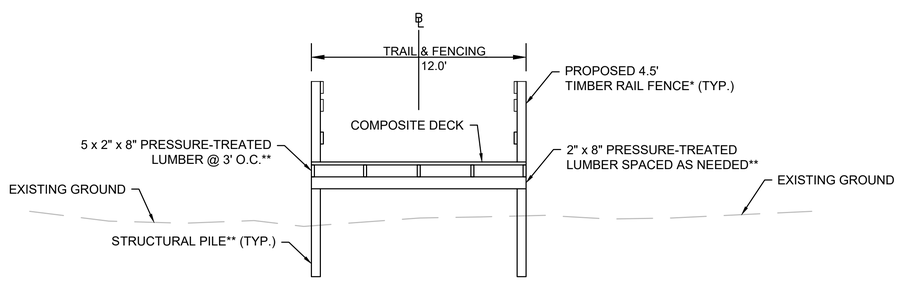

OFF-ROAD TRAIL

BOARDWALK OVER WETLANDS
SCALE: 1" = 4'

NOTE:
* LOCATION OF TIMBER RAIL FENCE AS REQUIRED BY ENGINEER.
** ACTUAL SIZING AND SPACING OF STRUCTURAL MEMBERS AND PILES TO BE DETERMINED BY STRUCTURAL ENGINEER.

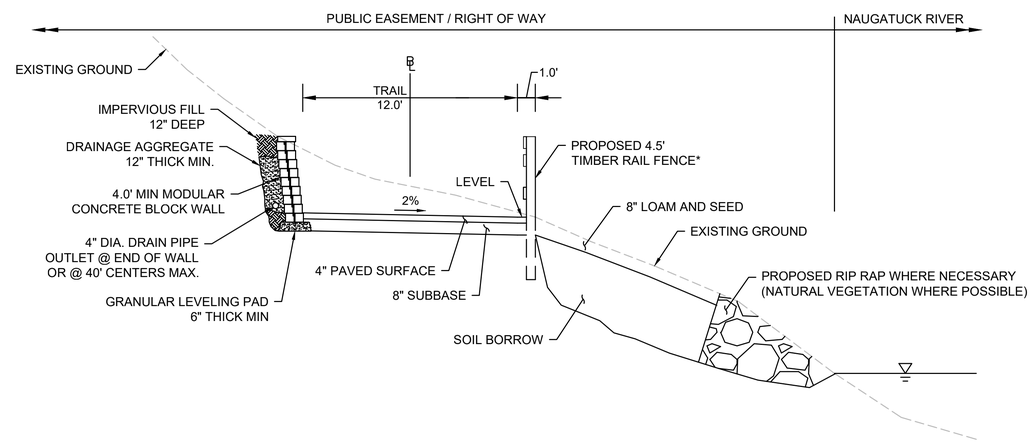

OFF-ROAD TRAIL

STEEP CROSS SLOPE
SCALE: 1" = 4'

NOTE:
* LOCATION OF TIMBER RAIL FENCE AS REQUIRED BY ENGINEER.

WILLIAM PAILLE DATE
PROFESSIONAL ENGINEER

NAUGATUCK RIVER GREENWAY

ROUTING STUDY

IN

HARWINTON / LITCHFIELD
THOMASTON/TORRINGTON
CONNECTICUT

SEPTEMBER 2019

REVISIONS:

NO.	DATE	DESC.

PREPARED FOR:
NAUGATUCK VALLEY COG
49 LEAVENWORTH STREET
WATERBURY, CT 06702

BSC GROUP
300 Winding Brook Drive
Glastonbury, Connecticut
06033
860 652 8227

© 2017 BSC Group, Inc.

SCALE: SEE PLAN

FILE: \PROJ\8366102\TRANS_DWG
DWG.:
JOB. NO: 83661.02
SHEET 2 OF 3

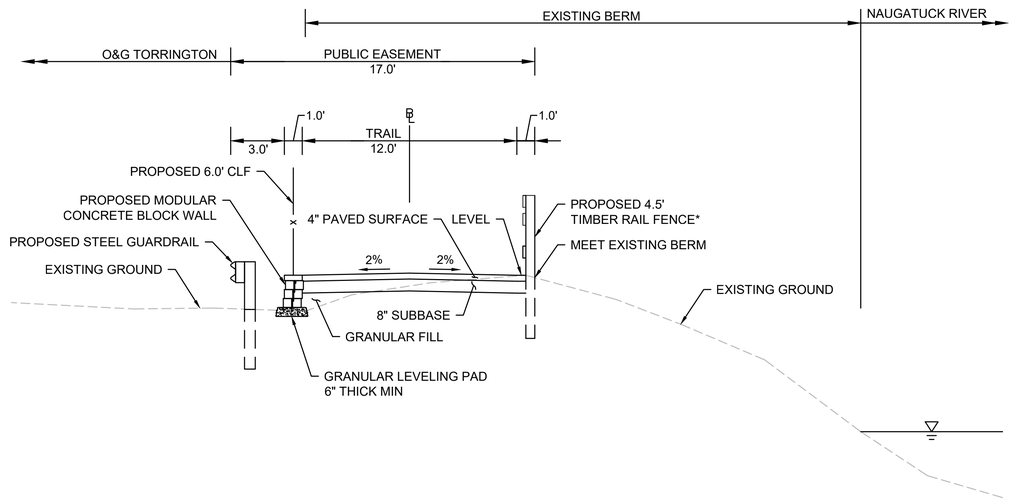

OFF-ROAD TRAIL

ALONG O&G TORRINGTON BERM
SCALE: 1" = 4'

NOTE:
* LOCATION OF TIMBER RAIL FENCE AS REQUIRED BY ENGINEER.

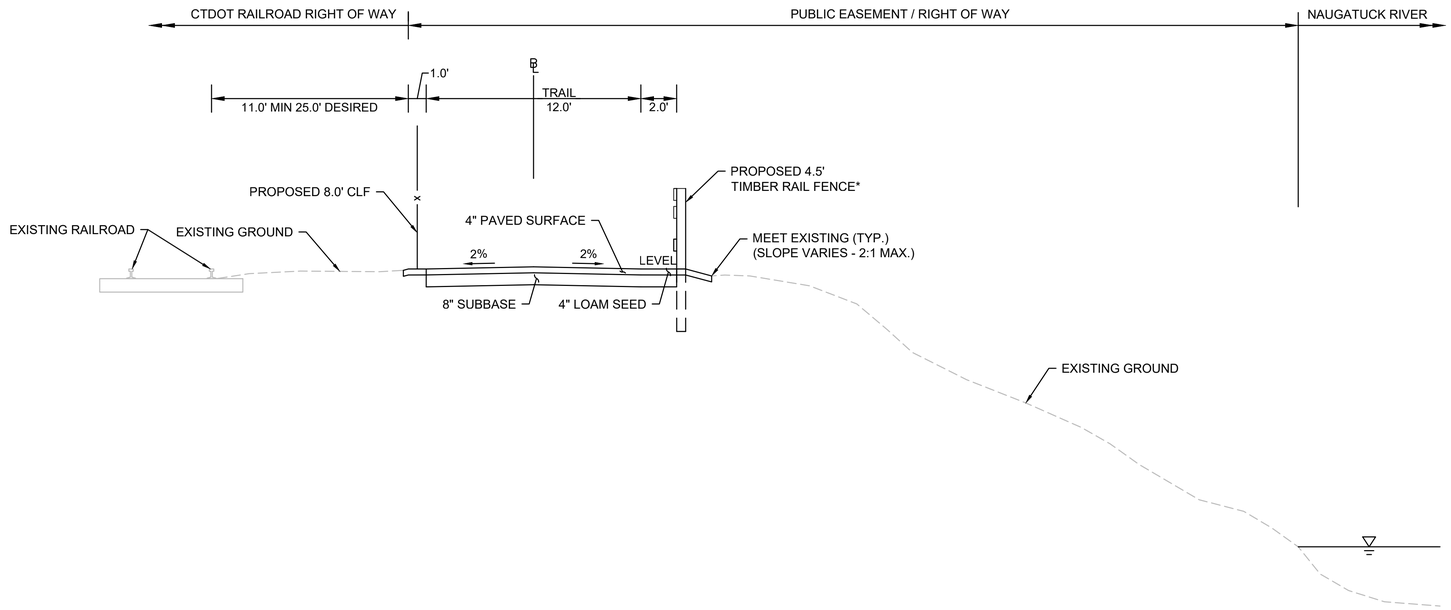

OFF-ROAD TRAIL

NEAR / WITHIN RAILROAD RIGHT OF WAY
SCALE: 1" = 4'

NOTE:
* LOCATION OF TIMBER RAIL FENCE AS REQUIRED BY ENGINEER.

WILLIAM PAILLE DATE
PROFESSIONAL ENGINEER

NAUGATUCK RIVER GREENWAY

ROUTING STUDY

IN

HARWINTON / LITCHFIELD
THOMASTON/TORRINGTON
CONNECTICUT

SEPTEMBER 2019

REVISIONS:

NO.	DATE	DESC.

PREPARED FOR:
NAUGATUCK VALLEY COG
49 LEAVENWORTH STREET
WATERBURY, CT 06702

BSC GROUP
300 Winding Brook Drive
Glastonbury, Connecticut
06033
860 652 8227

© 2017 BSC Group, Inc.

SCALE: SEE PLAN

FILE: \PROJ\8366102\TRANS_DWG
DWG.:
JOB. NO: 83661.02
SHEET 3 OF 3